HEAT PUMP OUTDOOR UNITS

XP16

ELITE® Series

R-410A - Two-Stage Compressor

PRODUCT SPECIFICATIONS

Bulletin No. 210463
October 2017
Supersedes August 2017

ELITE® SERIES

SEER up to 17.00
2 to 5 Tons
Cooling Capacity - 23,600 to 59,000 Btuh
Heating Capacity - 21,000 to 61,500 Btuh

MODEL NUMBER IDENTIFICATION

X P 16 - 036 - 230 - 6

Refrigerant Type
X = R-410A

Unit Type
P = Heat Pump Outdoor Unit

Series

Nominal Cooling Capacity
024 = 2 tons
036 = 3 tons
048 = 4 tons
060 = 5 tons

Voltage
230 = 208/230V-1phase-60hz

Minor Revision Number

CONTENTS

AHRI System Matches..... 10
Dimensions..... 7
Electrical Data..... 6
Features..... 2
Field Wiring..... 8
Installation Clearances 8
Model Number Identification 1
Optional Accessories - Order Separately..... 6
Sound Data..... 8
Specifications..... 6

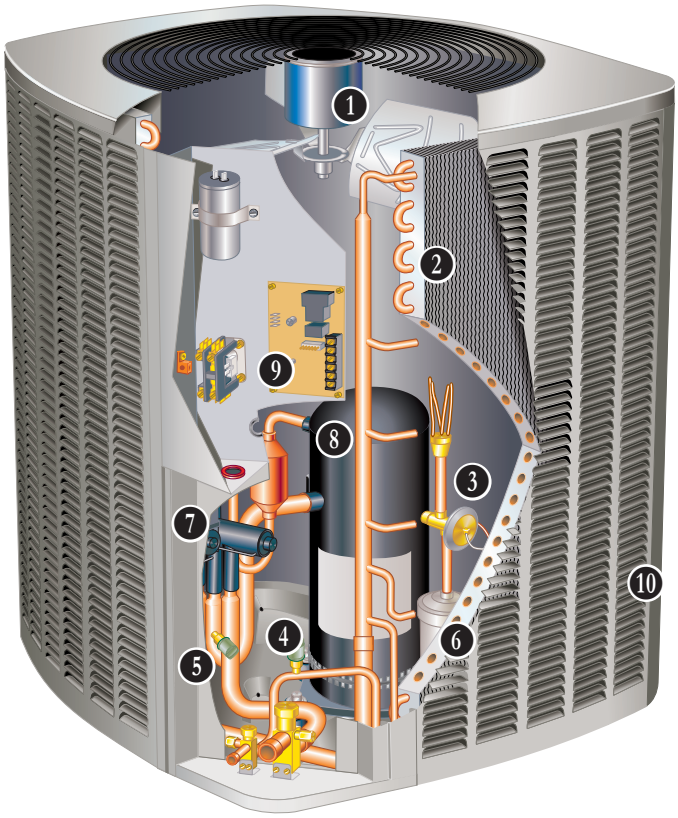

WARRANTY

Compressor - Limited warranty for **ten years** in residential installations and five years in non-residential installations.

All other covered components - Five years in residential installations and one year in non-residential installations.
Refer to Lennox Equipment Limited Warranty certificate included with unit for specific details.

APPROVALS

AHRI Certified to AHRI Standard 210/240-2008.

Sound rated in Lennox reverberant sound test room in accordance with test conditions included in AHRI Standard 270-2008.

Tested in the Lennox Research Laboratory environmental test room.

Rated according to U.S. Department of Energy (DOE) test procedures.

Air conditioners and components within bonded for grounding to meet safety standards for servicing required by UL and CEC.

Units are ETL certified for the U.S. and Canada.

ISO 9001 Registered Manufacturing Quality System.

For expanded ratings, see www.LennoxPROs.com.

APPLICATIONS

SEER up to 17.00.

HSPF (region IV) up to 9.50.

2 through 5 ton.

Single phase power supply.

Sound levels as low as 74 dB.

Vertical air discharge allows concealment behind shrubs at grade level or out of sight on a roof.

Designed for applications with remotely located indoor air handler units or gas furnaces with indoor add-on coils.

When heat pumps are used with gas furnaces, a dual-fuel compatible thermostat or a zone control system with dual-fuel capabilities must be used (order separately).

Units shipped completely factory assembled, piped, and wired. Each unit is test operated at the factory insuring proper operation.

Installer must set heat pump, connect refrigerant lines, and make electrical connections to complete job.

FEATURES

REFRIGERATION SYSTEM

R-410A Refrigerant
Non-chlorine, ozone friendly, R-410A.

Unit is factory pre-charged. See Specification table.

Total system refrigerant charge is dependant on outdoor unit size, indoor unit size and refrigerant line length.

Refer to the unit-mounted charging sticker to determine correct amount of charge required.

1 Outdoor Coil Fan
Direct drive fan moves large air volumes uniformly through entire condenser coil for high refrigerant cooling capacity. 060 models have a variable-speed outdoor fan motor for quiet operation.

Vertical air discharge minimizes operating sounds and eliminates damage to lawn and shrubs.

Fan motor has sleeve bearings and is inherently protected.

Motor totally enclosed for maximum protection from weather, dust and corrosion

Fan guard constructed of corrosion-resistant PVC (polyvinyl chloride) coated steel.

Fan service access accomplished by removal of fan guard.

2 Copper Tube/Enhanced Fin Coil
Lennox designed and fabricated coil.

Ripple-edged aluminum fins.

Copper tube construction.

Lanced fins provide maximum exposure of fin surface to air stream resulting in excellent heat transfer.

Fin collars grip tubing for maximum contact area.

Inverted coil circuiting prevents ice buildup at coil base in low ambients. Discharge gas enters bottom of coil during defrost and heat of refrigerant flows counter to water drainage resulting in extremely clean and unobstructed fins and tubes.

Fin spacing allows rapid and complete water drainage.

Flared shoulder tubing connections/silver soldering construction.

Coil is factory tested under high pressure to insure leakproof construction.

Entire coil is accessible for cleaning.

3 Expansion Valve - Outdoor Unit
Designed and sized specifically for use in heat pump system.

Sensing bulb is located on the line between reversing valve and the coil thus sensing suction temperature in the heat cycle.

Factory installed and piped.

Discharge Temperature Switch
Shuts off unit if operating conditions cause the compressor discharge line temperature to rise above setpoint.

Protects compressor from excessive pressure / temperature.

Automatic reset when temperature drops below setpoint.

4 High Pressure Switch
Shuts off unit if abnormal operating conditions cause the discharge pressure to rise above setting.

Protects compressor from excessive condensing pressure.

Auto-reset.

5 Low Pressure Switch
Shuts off unit if suction pressure falls below setting.

Provides loss of charge and freeze-up protection.

Auto-reset.

6 Hi-Capacity Liquid Line Drier
Factory installed in the liquid line, the drier traps moisture or dirt that could contaminate the refrigerant system.

100% molecular-sieve bead type drier.

7 Reversing Valve
4-way interchange reversing valve effects a rapid change in direction of refrigerant flow resulting in quick changeover from cooling to heating and vice versa.

Valve operates on pressure differential between outdoor unit and indoor unit of the system. Factory installed.

Optional Accessories

Expansion Valve Kits
Must be ordered separately and field installed on certain indoor units. See TXV Usage table.

Chatleff style fitting.

Freezestat
Installs on or near the discharge line of the evaporator or on the suction line.

Senses suction line temperature and cycles the compressor off when suction line temperature falls below its setpoint.

Opens at 29°F and closes at 58°F.

Refrigerant Line Kits
Refrigerant lines (suction & liquid) are shipped refrigeration clean. Lines are cleaned, dried, pressurized, and sealed at factory.

Suction line fully insulated.

L15 lines are stubbed at both ends.

See Specifications table for selection.

Not available for -060 model and must be field fabricated.

COMPRESSOR

8 Copeland Scroll Ultra Tech™ Two-Stage Compressor

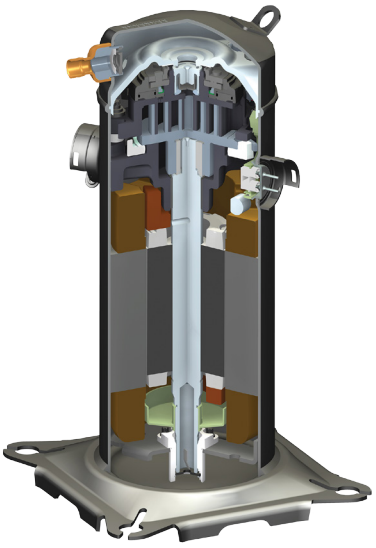

Compressor features high efficiency with uniform suction flow, constant discharge flow, high volumetric efficiency and quiet operation.
Compressor consists of two involute spiral scrolls matched together to generate a series of crescent shaped gas pockets between them.
During compression, one scroll remains stationary while the other scroll orbits around it.
Gas is drawn into the outer pocket, the pocket is sealed as the scroll rotates.
As the spiral movement continues, gas pockets are pushed to the center of the scrolls. Volume between the pockets is simultaneously reduced.

When the pocket reaches the center, gas is now at high pressure and is forced out of a port located in the center of the fixed scrolls. During compression, several pockets are compressed simultaneously resulting in a smooth continuous compression cycle.
Continuous flank contact, maintained by centrifugal force, minimizes gas leakage and maximizes efficiency.
Scroll compressor is tolerant to the effects of slugging and contaminants. If this occurs, scrolls separate, allowing liquid or contaminants to to be worked toward the center and discharged.

During the compression process, there are several pockets in the scroll that are compressing gas.
Modulation is achieved by venting a portion of the gas in the first suction pocket back to the low side of the compressor thereby reducing the effective displacement of the compressor.

A 24-volt DC solenoid valve inside the compressor controls staging. When the 3-way solenoid is energized it moves the lift ring assembly to block the ports and the compressor operates at full-load or 100% capacity. When the solenoid is de-energized the lift ring assembly moves to unblock the compressor ports and the compressor operates at part-load or approximately 67% of its full-load capacity.

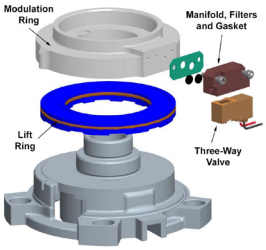

The "loading" and "unloading" of the two stage scroll is done "on the fly" without shutting off the single-speed compressor motor between stages.

Low gas pulses during compression reduces operational sound levels.

Compressor motor is internally protected from excessive current and temperature.

Compressor is installed in the unit on specially formulated, resilient rubber mounts for better sound dampening and vibration free operation.

Crankcase Heater
Crankcase heater prevents migration of liquid refrigerant into compressor and ensures proper compressor lubrication.

CONTROLS

9 Defrost Control
Control furnished as standard.

Gives a demand defrost cycle whenever system heating performance falls below optimum levels. The sensing element on coil determines when defrost cycle is required and when to terminate cycle.

Anti-short cycle (5 minutes) incorporated into the board.

Diagnostic LED's furnished as an aid in troubleshooting.

Conveniently located in control box.

Optional Accessories

Blower Relay Kit
(For Use With EL195E and ML180E Gas Furnaces)
Allows furnace blower speed changes when matched with two-stage heat pumps.

ComfortSense® 7500 Touchscreen Thermostat

Electronic 7-day, universal, multi-stage, programmable, touchscreen thermostat.

4 Heat/2 Cool.

Auto-changeover.

Dual-fuel control with optional outdoor sensor.

Controls dehumidification during cooling mode and humidification during heating mode.

Offers enhanced capabilities including humidification / dehumidification / dewpoint measurement and control, *Humiditrol*® control, and equipment maintenance reminders.

Easy-to-use, menu driven thermostat with a back-lit, LCD touchscreen.

See the ComfortSense 7500 Product Specifications bulletin in the Controls section for more information.

Remote Outdoor Temperature Sensor for ComfortSense® 7500 Thermostat
Allows the thermostat to display outdoor temperature. Required in dual-fuel and *Humiditrol*® applications.

CONTROLS (continued)

Optional Accessories

Compressor Hard Start Kit
Single-phase units are equipped with a PSC compressor motor.

This type of motor normally does not need a potential relay and start capacitor.

In conditions such as low voltage, kit may be required to increase the compressor starting torque.

Hard start kit is required in applications where the supply voltage is less than 230V.

Indoor Blower Off Delay Relay
Delays the indoor blower-off time during the cooling cycle.

See AHRI Rating Tables for usage.

Indoor Blower Speed Relay Kit
Relay kit provides the option of changing blower speeds on standard permanent split capacitor (PSC) multi-tap blower motors during cooling operation.

Provides optimum humidity control conditions by automatically reducing indoor blower speed during continuous fan operation or low stage compressor operation to reduce humidity levels.

Low Ambient Kit
Heat pump will operate in the cooling mode satisfactorily down to 45°F outdoor air temperature without any additional controls.

Kit can be added in the field enabling unit to operate properly down to 30°F.

A Freezestat should be installed on compressors equipped with a low ambient kit.

A Compressor Low Ambient Cut-Off should be added to terminate compressor operation below recommended operation conditions (on/off operation, 30°F or modulating operation, 0°F.

Mild Weather Kit
Heat pump units operate satisfactorily in the heating mode at outdoor air temperatures up to 75°F.

Mild Weather Kit can be field installed, allowing heating operation above 75°F.

Monitor Kit - Service Light
Contains ambient compensating thermistor and service light thermostat.

For use with thermostats requiring input for indicator lights.

Outdoor Thermostat Kit
An outdoor thermostat can be used to lock out some of the electric heating elements on indoor units where two-stage control is applicable.

Outdoor thermostat maintains the heating load on the low power input as long as possible before allowing the full power load to come on the line.

Thermostat kit and mounting box must be ordered extra.

CABINET

Heavy-gauge steel construction

Pre-painted cabinet finish.

Control box is conveniently located with all controls factory wired.

Large removable panel provides service access.

Drainage holes are provided in base section for moisture removal.

High density polyethylene unit support feet raise the unit off of the mounting surface, away from damaging moisture.

PermaGuard™ Unit Base
Durable zinc-coated base section resists rust and corrosion.

⑩ SmartHinge™ Louvered Coil Protection
Steel louvered panels provides complete coil protection.

Panels are hinged to allow easy cleaning and servicing of coils.

Panels may be completely removed.

Interlocking tabs and slots assure tight fit on cabinet.

Refrigerant Line Connections, Electrical Inlets and Service Valves
Vapor and liquid lines are located on corner of unit cabinet and are made with sweat connections. See dimension drawing.

Fully serviceable brass service valves prevent corrosion and provide access to refrigerant system. Vapor valve can be fully shut off, while liquid valve may be front seated to manage refrigerant charge while servicing system.

Refrigerant line connections and field wiring inlets are located in one central area of the cabinet. See dimension drawing.

Optional Accessories

Snow Guards
For use in locations where the possibility of heavy snow or freezing rain accumulation may occur.

Heavy gauge powder coated steel guard deflects snow and ice away from the outdoor fan and prevents build-up on the fan guard.

SPECIFICATIONS

General Data	Model No.	XP16-024	XP16-036	XP16-048	XP16-060
	Nominal Tonnage	2	3	4	5
Connections (sweat)	Liquid line (o.d.) - in.	3/8	3/8	3/8	3/8
	Vapor line (o.d.) - in.	3/4	7/8	7/8	1-1/8
Refrigerant	[1] R-410A charge furnished	8 lbs. 11 oz.	10 lbs. 6 oz.	10 lbs. 9 oz.	11 lbs. 8 oz.
Outdoor Coil	Net face area - sq. ft. Outer coil	15.21	21.00	22.17	29.09
	Inner coil	14.50	20.27	21.51	28.16
	Tube diameter - in.	5/16	5/16	5/16	5/16
	No. of rows	2	2	2	2
	Fins per inch	22	22	2	22
Outdoor Fan	Diameter - in.	18	22	26	26
	No. of blades	3	4	3	3
	Motor hp	1/10	1/4	1/3	1/3
	Cfm - 1st stage	2232	3900	4100	3690
	2nd stage	- - -	- - -	- - -	4250
	Rpm - 1st stage	1035	830	855	700
	2nd stage	- - -	- - -	- - -	820
	Watts - 1st stage	145	295	265	130
	2nd stage	- - -	- - -	- - -	195
Shipping Data - lbs. 1 pkg.		222	273	294	353

ELECTRICAL DATA

Line voltage data - 60hz		[4] 208/230V-1ph	[4] 208/230V-1ph	[4] 208/230V-1ph	[4] 208/230V-1ph
[2] Maximum overcurrent protection (amps)		25	35	45	60
[3] Minimum circuit ampacity		15.3	20.8	28.3	36.8
Compressor	Rated load amps	11.70	15.3	21.20	27.1
	Locked rotor amps	58.3	83	104	152.9
	Power factor	0.98	0.99	0.99	0.99
Outdoor Coil Fan Motor	Full load amps	0.7	1.7	1.8	2.8

OPTIONAL ACCESSORIES - ORDER SEPARATELY

Blower Relay Kit - for EL195E and ML180E gas furnaces		85W66	•	•	•	•
ComfortSense® 7500 Thermostat		13H14	•	•	•	•
Outdoor Temperature Sensor - for ComfortSense® 7500 Thermostat		X2658	•	•	•	•
Compressor Hard Start Kit - Required in applications with less than 230V		63W22	•			
		10J42		•	•	
		63W24				•
Freezestat	3/8 in. tubing	93G35	•	•	•	•
	5/8 in. tubing	50A93	•	•	•	•
Indoor Blower Speed Relay Kit		40K58	•	•	•	•
Indoor Blower Off Delay Relay		58M81	•	•	•	•
[5] Low Ambient Kit		54M89	•	•	•	
		68M04				•
Mild Weather Kit		33M07	•	•	•	•
Monitor Kit - Service Light		76F53	•	•	•	•
Outdoor Thermostat Kit	Thermostat	56A87	•	•	•	•
	Mounting Box	31461	•	•	•	•
Refrigerant Line Sets	L15-41-20 L15-41-30	L15-41-40 L15-41-50	•			
	L15-65-30	L15-65-40 L15-65-50		•	•	
	Field Fabricate					•
[6] Snow Guards	28-1/2 x 27-1/2 in.	X8781	•			
	39-1/2 x 35-5/8 in.	Y1033		•	•	•

NOTE - Extremes of operating range are plus 10% and minus 5% of line voltage.

[1] Refrigerant charge sufficient for 15 ft. length of refrigerant lines. For longer line set requirements see the Installation Instructions for information about line set length and additional refrigerant charge required.

[2] HACR type breaker or fuse.

[3] Refer to National or Canadian Electrical Code manual to determine wire, fuse and disconnect size requirements.

[4] Hard start kit is required in applications where the supply voltage is less than 230V.

[5] Compressor Low Ambient Cut-Off and Freezestat are recommended with Low Ambient Kit.

[6] Adds 11-1/2 inches (292 mm) to unit height.

DIMENSIONS - INCHES (MM)

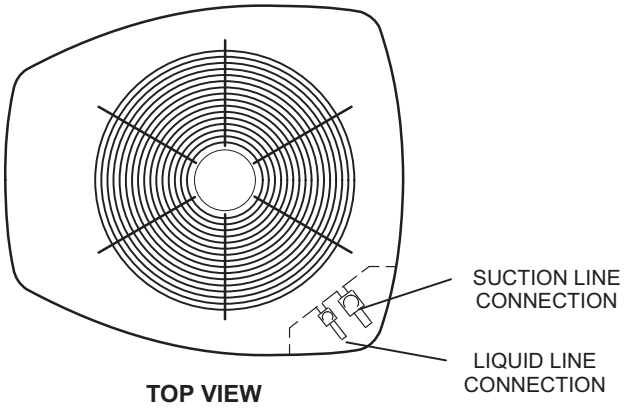

TOP VIEW

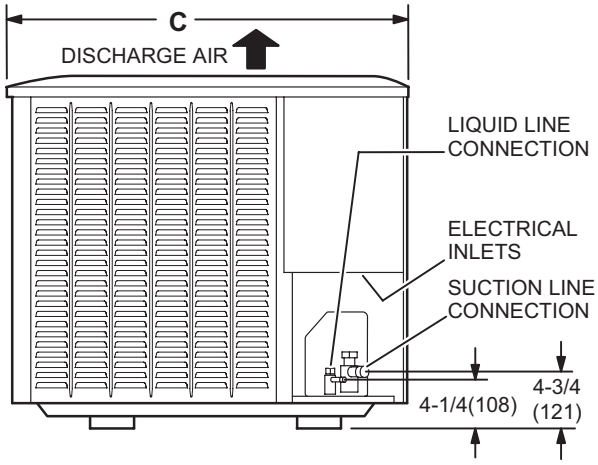

SIDE VIEW

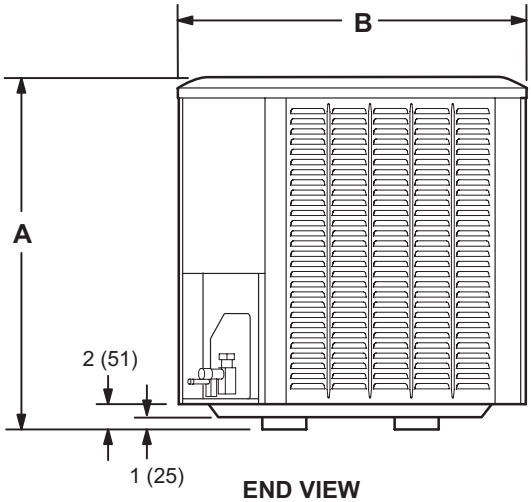

END VIEW

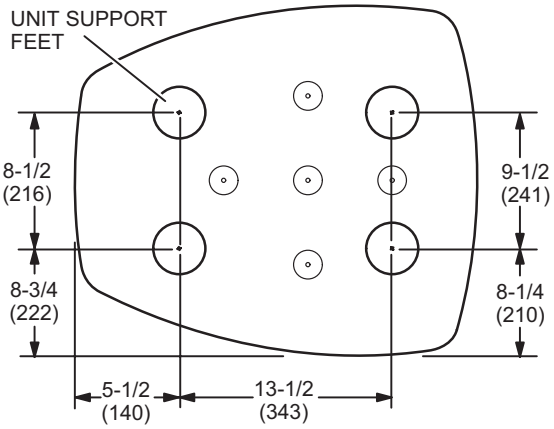

XP16-024 BASE SECTION (Small Base)

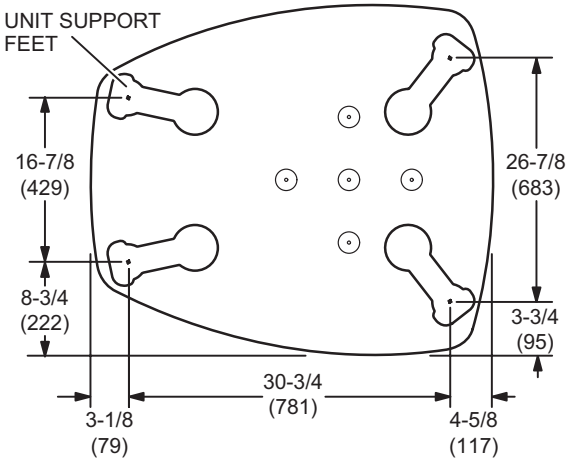

XP16-036 TO -060 BASE SECTION (Large Base)

Model No.	A		B		C	
	in.	mm	in.	mm	in.	mm
XP16-024	35	889	27	686	28	711
XP16-036	35	889	35-1/2	902	39-1/2	1003
XP16-048	35	889	35-1/2	902	39-1/2	1003
XP16-060	45	1143	35-1/2	902	39-1/2	1003

FIELD WIRING

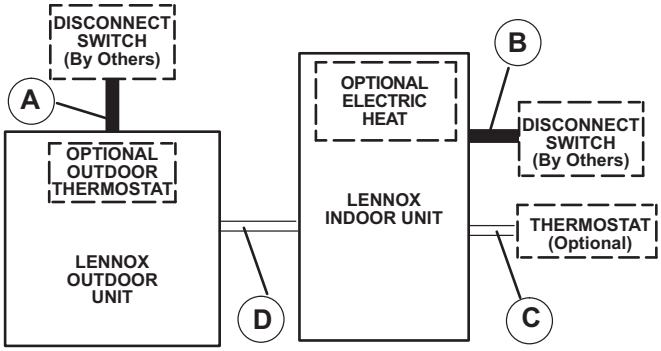

A - Two Wire Power (see Electrical Data)
B - Two or Three Wire Power (size to heater capacity)
C - Twelve Wire Low Voltage 18 ga. minimum
Fourteen Wire Low Voltage with Optional Outdoor Thermostat
D - Eight Wire Low Voltage 18 ga. minimum
Ten Wire Low Voltage with Optional Outdoor Thermostat
NOTE - Field Wiring Not Furnished
All wiring must conform to NEC or CEC and local electrical codes.

SOUND DATA

[1] Unit Model No.	125	250	500	1000	2000	4000	8000	[1] Sound Rating Number (dB)
XP16-024	72.0	70.0	69.5	68.5	63.5	58.0	56.5	74
XP16-036	72.5	71.5	73.0	70.5	66.0	60.5	58.5	76
XP16-048	72.5	71.5	73.0	70.5	66.0	60.5	58.5	76
XP16-060	72.5	73.5	77.5	72.5	67.0	62.5	58.5	78

NOTE - the octave sound power data does not include tonal correction.
[1] Tested according to AHRI Standard 270-2008 test conditions.

INSTALLATION CLEARANCES

NOTES:
Service clearance of 30 in. (762 mm) must be maintained on one of the sides adjacent to the control box.
Clearance to one of the other three sides must be 36 in. (914 mm)
Clearance to one of the remaining two sides may be 12 in. (305 mm) and the final side may be 6 in. (152 mm).
A clearance of 24 in. must be maintained between two units.
48 in. (1219 mm) clearance required on top of unit.

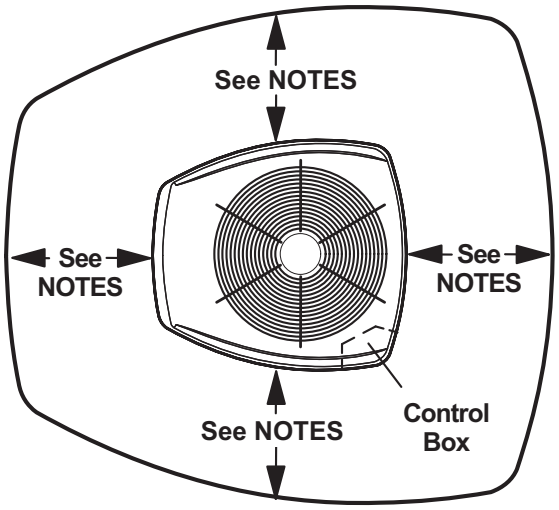

TXV USAGE

Use this table for C33, CH23, CH33 and CR33 Field Installed TXV Match-Ups.

Model No.	Order No.
XP16-024	**12J18**
XP16-036	**12J19**
XP16-048	**12J20**
XP16-060	**12J20**

CX34 upflow coils and all Lennox air handlers are shipped with a factory installed TXV. In most cases, no change out of the valve is needed.

C33 and CH33 coils - Replace the factory installed orifice with the expansion valve listed.

CR33 and CH23 - Use the expansion valve listed.

MOST POPULAR MATCHES

Outdoor Unit Model No.	Indoor Unit Model No
XP16-024	CBX32MV-024/030
XP16-036	CBX32MV-036
XP16-048	CBX32MV-060
XP16-060	CBX32MV-060

AHRI STANDARD 210/240

Cooling or heating capacities are net values, including the effects of blower motor heat, and do not include supplementary heat. Power input is the total power input to the compressor(s) and fan(s), plus any controls and other items required as part of the system for normal operation.

Units which do not have an indoor air-circulating blower furnished as part of the model, i.e., split system with indoor coil only, is established by subtracting from the total cooling capacity 1250 Btu/h per 1,000 cfm, and by adding the same amount to the heating capacity. Total power input for both heating and cooling is increased by 365 W per 1,000 cfm of indoor air circulated.

AHRI SYSTEM MATCHES

Model No.	Cooling Capacity	SEER	EER	Heat Capacity		Heat COP		HSPF (IV)	Coil or Air Handler	Furnace	AHRI Reference
				High	Low	High	Low				
XP16-024-230	24200	16	12.5	21600	13300	3.64	2.48	8.5	C33-38A	SL280UH070V36A	7785776
XP16-024-230	24200	15.1	12.5	21600	13300	3.64	2.48	8.5	C33-38A	SL280UH070XV36A	7785773
XP16-024-230	24000	16	12.5	21600	13300	3.6	2.46	8.5	C33-38B	EL296UH070XV36B	7785768
XP16-024-230	24200	16	12.5	21600	13300	3.66	2.5	8.5	C33-38B	SL280UH090V36B	7785762
XP16-024-230	24000	16	12.5	21600	13300	3.6	2.46	8.5	C33-38B	SLP98UH070XV36B	7785767
XP16-024-230	23800	16	12.2	22400	13900	3.34	2.44	8.5	C35-30A	SL280UH070V36A	9910944
XP16-024-230	23800	16	12.2	22400	13900	3.34	2.44	8.5	C35-30A	SL280UH070XV36A	9910945
XP16-024-230	23800	15.5	12.2	22400	13900	3.34	2.42	8.5	C35-30B	EL296UH070XV36B	9910946
XP16-024-230	23600	15	12.2	22400	13800	3.36	2.44	8.5	C35-30B	SL280UH090V36B	9910947
XP16-024-230	23800	15.5	12.2	22400	13900	3.34	2.42	8.5	C35-30B	SLP98UH070XV36B	9910948
XP16-024-230	24200	16	12.2	22200	13700	3.52	2.42	8.5	C35-36A	SL280UH070V36A	9910949
XP16-024-230	24200	16	12.2	22200	13700	3.52	2.42	8.5	C35-36A	SL280UH070XV36A	9910950
XP16-024-230	24200	15.5	12.2	22200	13700	3.52	2.42	8.5	C35-36B	EL296UH070XV36B	9910951
XP16-024-230	24200	15	12.5	22000	13600	3.5	2.42	8.2	C35-36B	SL280UH090V36B	9910952
XP16-024-230	24200	15.5	12.2	22200	13700	3.52	2.42	8.5	C35-36B	SLP98UH070XV36B	9910953
XP16-024-230	24200	16	12.5	21600	13300	3.64	2.48	8.5	C37-38A	SL280UH070V36A	10084930
XP16-024-230	24200	15.1	12.5	21600	13300	3.64	2.48	8.5	C37-38A	SL280UH070XV36A	10084929
XP16-024-230	24000	16	12.5	21600	13300	3.6	2.46	8.5	C37-38B	EL296UH070XV36B	10084926
XP16-024-230	24200	16	12.5	21600	13300	3.66	2.5	8.5	C37-38B	SL280UH090V36B	10084923
XP16-024-230	24000	16	12.5	21600	13300	3.6	2.46	8.5	C37-38B	SLP98UH070XV36B	10084925
XP16-024-230	24000	15.5	12	22600	13600	3.6	2.54	8.5	CBA27UHE-024		10258586
XP16-024-230	24000	14.5	12	23400	14400	3.4	2.42	8.2	CBX25UHV-030		7785764
XP16-024-230	24200	15.5	11.2	22400	13700	3.7	2.54	8.5	CBX27UH-024		7785754
XP16-024-230	24000	16	12.5	22200	12900	3.62	2.38	8.5	CBX27UH-030		7785755
XP16-024-230	24400	16.5	12.5	22400	14000	3.72	2.6	8.5	CBX32MV-024/030		7785758
XP16-024-230	24400	17	12.5	22400	13100	3.66	2.38	8.5	CBX32MV-036		7785757
XP16-024-230	24200	16	12	22200	13000	3.6	2.38	8.5	CBX40UHV-024		7785759
XP16-024-230	24000	16	12	22200	12900	3.6	2.36	8.5	CBX40UHV-030		7785756
XP16-024-230	24400	16	12.5	22400	13100	3.68	2.4	8.5	CBX40UHV-036		7785765
XP16-024-230	24800	16	12	21000	13900	3.3	2.5	8.5	CH33-31B	EL296UH070XV36B	7785771
XP16-024-230	24800	15.1	12.2	21000	13900	3.34	2.52	8.2	CH33-31B	SL280UH090V36B	7785775
XP16-024-230	24800	16	12	21000	13900	3.3	2.5	8.5	CH33-31B	SLP98UH070XV36B	7785774
XP16-024-230	23800	15.5	12.2	21800	13600	3.24	2.3	8.2	CH35-30B	EL296UH070XV36B	9910941
XP16-024-230	23800	15	12.2	21600	13500	3.24	2.3	8.2	CH35-30B	SL280UH090V36B	9910942
XP16-024-230	23800	15.5	12.2	21800	13600	3.24	2.3	8.2	CH35-30B	SLP98UH070XV36B	9910943
XP16-024-230	23600	16	12.5	23200	13900	3.36	2.34	8.2	CR33-30/36	SLP98DF070XV36B	7785772
XP16-024-230	23600	16	12.5	23200	13900	3.36	2.36	8.2	CR33-30/36	SLP98DF090XV36C	7785766
XP16-024-230	24200	16	12.5	21600	13300	3.64	2.48	8.5	CX34-38A	SL280UH070V36A	7785760
XP16-024-230	24200	16	12.5	21600	13300	3.64	2.48	8.5	CX34-38A	SL280UH070XV36A	7785770
XP16-024-230	24200	16	12.5	21600	13400	3.62	2.48	8.5	CX34-38B	EL296UH070XV36B	7785769
XP16-024-230	24400	16	12.5	21800	13400	3.68	2.48	8.5	CX34-38B	SL280UH090V36B	7785761
XP16-024-230	24000	16	12.5	21600	13300	3.6	2.46	8.5	CX34-38B	SLP98UH070XV36B	7785763
XP16-024-230	23800	16	12.2	22400	13900	3.34	2.44	8.5	CX35-30A	SL280UH070V36A	9910931
XP16-024-230	23800	16	12.2	22400	13900	3.34	2.44	8.5	CX35-30A	SL280UH070XV36A	9910932
XP16-024-230	23800	15.5	12.2	22400	13900	3.34	2.42	8.5	CX35-30B	EL296UH070XV36B	9910933
XP16-024-230	23600	15	12.2	22400	13800	3.36	2.44	8.5	CX35-30B	SL280UH090V36B	9910934

NOTES:

All matches with EL195E and ML180E gas furnaces require the use of a Blower Motor Relay Kit (**85W66**) for proper unit operation.

Ratings are AHRI certified to AHRI Standard 210/240 (with 25 ft. of connecting refrigerant lines);

- Cooling Ratings - 95°F outdoor air temperature and 80°F db/67°F wb entering indoor coil air.
- High Temperature Heating Ratings - 47°F db/43°F wb outdoor air temperature and 70°F db entering indoor coil air.
- Low Temperature Heating Ratings - 17°F db/15°F wb outdoor air temperature and 70°F db entering indoor coil air.

All ratings include the use of a blower time delay relay (TDR). All Lennox variable-speed Furnaces and Air Handlers have time delay capabilities. Other Furnaces and Air Handlers may require an optional time delay relay (**58M81**) for field installation. See furnace or air handler specifications to determine if relay is needed.

Also see TXV Substitution Table at the beginning of the Heat Pump AHRI System Matches section.

When used with gas furnaces, a dual-fuel control, a control system with dual-fuel capabilities (LZP-2 or LZP-4), or a thermostat with dual-fuel capabilities must be used (ordered extra).

To convert HSPF from Region IV to Region V - Divide by 1.15.

AHRI SYSTEM MATCHES

Model No.	Cooling Capacity	SEER	EER	Heat Capacity		Heat COP		HSPF (IV)	Coil or Air Handler	Furnace	AHRI Reference
				High	Low	High	Low				
XP16-024-230	23800	15.5	12.2	22400	13900	3.34	2.42	8.5	CX35-30B	SLP98UH070XV36B	9910935
XP16-024-230	24200	16	12.2	22200	13700	3.52	2.42	8.5	CX35-36A	SL280UH070V36A	9910936
XP16-024-230	24200	16	12.2	22200	13700	3.52	2.42	8.5	CX35-36A	SL280UH070XV36A	9910937
XP16-024-230	24200	15.5	12.2	22200	13700	3.52	2.42	8.5	CX35-36B	EL296UH070XV36B	9910938
XP16-024-230	24200	15	12.5	22000	13600	3.5	2.42	8.2	CX35-36B	SL280UH090V36B	9910939
XP16-024-230	24200	15.5	12.2	22200	13700	3.52	2.42	8.5	CX35-36B	SLP98UH070XV36B	9910940
XP16-024-230	24200	16	12.5	21600	13300	3.64	2.48	8.5	CX38-38A	SL280UH070V36A	10084921
XP16-024-230	24200	16	12.5	21600	13300	3.64	2.48	8.5	CX38-38A	SL280UH070XV36A	10084928
XP16-024-230	24200	16	12.5	21600	13400	3.62	2.48	8.5	CX38-38B	EL296UH070XV36B	10084927
XP16-024-230	24400	16	12.5	21800	13400	3.68	2.48	8.5	CX38-38B	SL280UH090V36B	10084922
XP16-024-230	24000	16	12.5	21600	13300	3.6	2.46	8.5	CX38-38B	SLP98UH070XV36B	10084924
XP16-036-230	37000	16	13	32800	21600	3.1	2.56	8.5	C33-43	EL180UH070E36B	7785832
XP16-036-230	37000	15.5	12.5	33600	22200	3.02	2.46	8.5	C33-43	EL195UH045XE36B	7785808
XP16-036-230	37000	16	12.5	33200	21800	3.08	2.52	8.5	C33-43	EL195UH070XE36B	7785837
XP16-036-230	37200	16	13	33000	21800	3.1	2.56	8.5	C33-43	EL195UH090XE48C	7785849
XP16-036-230	37000	15.5	12.5	33600	22200	3.02	2.46	8.5	C33-43	EL296UH045XE36B	7785848
XP16-036-230	37000	16	12.5	33200	21800	3.08	2.52	8.5	C33-43	EL296UH070XE36B	7785822
XP16-036-230	37200	16	12.5	33200	22000	3.06	2.52	8.5	C33-43	EL296UH070XV36B	7785843
XP16-036-230	37200	16	13	33000	21800	3.1	2.56	8.5	C33-43	EL296UH090XE48C	7785811
XP16-036-230	37200	16	13	33000	21800	3.12	2.56	8.5	C33-43	EL296UH090XV36C	7785844
XP16-036-230	37000	16	13	33000	21600	3.1	2.54	8.5	C33-43	EL296UH090XV48C	7785833
XP16-036-230	37800	16	13	33400	22000	3.18	2.58	8.5	C33-43	EL296UH090XV60C	7785828
XP16-036-230	37600	16	13	33200	21800	3.18	2.58	8.5	C33-43	EL296UH110XV60C	7785803
XP16-036-230	37200	16	13	32800	21600	3.12	2.56	8.5	C33-43	SL280UH090V36B	7785827
XP16-036-230	37200	16	13	33000	21800	3.14	2.58	8.5	C33-43	SL280UH090V48B	7785802
XP16-036-230	37800	16	13	33200	21800	3.18	2.58	8.5	C33-43	SL280UH090V60C	7785810
XP16-036-230	37200	16	13	33000	21800	3.14	2.58	8.5	C33-43	SL280UH090XV48B	7785809
XP16-036-230	37800	16	13	33200	21800	3.18	2.58	8.5	C33-43	SL280UH090XV60C	7785839
XP16-036-230	37600	16	13	33200	21800	3.16	2.56	8.5	C33-43	SL280UH110V60C	7785850
XP16-036-230	37600	16	13	33200	21800	3.16	2.56	8.5	C33-43	SL280UH110XV60C	7785812
XP16-036-230	37200	16	12.5	33200	22000	3.06	2.52	8.5	C33-43	SLP98UH070XV36B	7785838
XP16-036-230	37200	16	13	33000	21800	3.12	2.56	8.5	C33-43	SLP98UH090XV36C	7785845
XP16-036-230	37000	16	13	33000	21600	3.1	2.54	8.5	C33-43	SLP98UH090XV48C	7785834
XP16-036-230	37800	16	13	33400	22000	3.18	2.58	8.5	C33-43	SLP98UH090XV60C	7785817
XP16-036-230	37600	16	13	33200	21800	3.18	2.58	8.5	C33-43	SLP98UH110XV60C	7785804
XP16-036-230	36800	14.5	12	33600	22400	2.96	2.42	8.2	C33-43B		7785782
XP16-036-230	36800	14.5	12	33600	22400	2.96	2.42	8.2	C33-43C		8444069
XP16-036-230	37400	16	13	34000	23000	2.88	2.4	8.2	C33-50/60C	EL296UH090XV60C	7785794
XP16-036-230	37200	16	13	33600	22800	2.86	2.4	8.2	C33-50/60C	EL296UH110XV60C	7785796
XP16-036-230	37400	16	13	33800	22800	2.88	2.4	8.2	C33-50/60C	SL280UH090V60C	7785797
XP16-036-230	37400	16	13	33800	22800	2.88	2.4	8.2	C33-50/60C	SL280UH090XV60C	7785798
XP16-036-230	37400	16	13	34000	23000	2.88	2.4	8.2	C33-50/60C	SLP98UH090XV60C	7785795
XP16-036-230	37200	16	13	33600	22800	2.86	2.4	8.2	C33-50/60C	SLP98UH110XV60C	7785789
XP16-036-230	37000	16	13	32800	21600	3.1	2.56	8.5	C37-43B	EL180UH070E36B	10084970
XP16-036-230	37000	15.5	12.5	33600	22200	3.02	2.46	8.5	C37-43B	EL195UH045XE36B	10084947
XP16-036-230	37000	16	12.5	33200	21800	3.08	2.52	8.5	C37-43B	EL195UH070XE36B	10084975

NOTES:

All matches with EL195E and ML180E gas furnaces require the use of a Blower Motor Relay Kit (**85W66**) for proper unit operation.

Ratings are AHRI certified to AHRI Standard 210/240 (with 25 ft. of connecting refrigerant lines);

- Cooling Ratings - 95°F outdoor air temperature and 80°F db/67°F wb entering indoor coil air.
- High Temperature Heating Ratings - 47°F db/43°F wb outdoor air temperature and 70°F db entering indoor coil air.
- Low Temperature Heating Ratings - 17°F db/15°F wb outdoor air temperature and 70°F db entering indoor coil air.

All ratings include the use of a blower time delay relay (TDR). All Lennox variable-speed Furnaces and Air Handlers have time delay capabilities. Other Furnaces and Air Handlers may require an optional time delay relay (**58M81**) for field installation. See furnace or air handler specifications to determine if relay is needed.

Also see TXV Substitution Table at the beginning of the Heat Pump AHRI System Matches section.

When used with gas furnaces, a dual-fuel control, a control system with dual-fuel capabilities (LZP-2 or LZP-4), or a thermostat with dual-fuel capabilities must be used (ordered extra).

To convert HSPF from Region IV to Region V - Divide by 1.15.

AHRI SYSTEM MATCHES

Model No.	Cooling Capacity	SEER	EER	Heat Capacity		Heat COP		HSPF (IV)	Coil or Air Handler	Furnace	AHRI Reference
				High	Low	High	Low				
XP16-036-230	37000	15.5	12.5	33600	22200	3.02	2.46	8.5	C37-43B	EL296UH045XE36B	10084985
XP16-036-230	37000	16	12.5	33200	21800	3.08	2.52	8.5	C37-43B	EL296UH070XE36B	10084960
XP16-036-230	37200	16	12.5	33200	22000	3.06	2.52	8.5	C37-43B	EL296UH070XV36B	10084980
XP16-036-230	37200	16	13	32800	21600	3.12	2.56	8.5	C37-43B	SL280UH090V36B	10084965
XP16-036-230	37200	16	13	33000	21800	3.14	2.58	8.5	C37-43B	SL280UH090V48B	10084941
XP16-036-230	37200	16	13	33000	21800	3.14	2.58	8.5	C37-43B	SL280UH090XV48B	10084948
XP16-036-230	37200	16	12.5	33200	22000	3.06	2.52	8.5	C37-43B	SLP98UH070XV36B	10084976
XP16-036-230	36800	14.5	12	33600	22400	2.96	2.42	8.2	C37-43B		10084111
XP16-036-230	37200	16	13	33000	21800	3.1	2.56	8.5	C37-43C	EL195UH090XE48C	10084986
XP16-036-230	37200	16	13	33000	21800	3.1	2.56	8.5	C37-43C	EL296UH090XE48C	10084950
XP16-036-230	37200	16	13	33000	21800	3.12	2.56	8.5	C37-43C	EL296UH090XV36C	10084981
XP16-036-230	37000	16	13	33000	21600	3.1	2.54	8.5	C37-43C	EL296UH090XV48C	10084971
XP16-036-230	37800	16	13	33400	22000	3.18	2.58	8.5	C37-43C	EL296UH090XV60C	10084966
XP16-036-230	37600	16	13	33200	21800	3.18	2.58	8.5	C37-43C	EL296UH110XV60C	10084942
XP16-036-230	37800	16	13	33200	21800	3.18	2.58	8.5	C37-43C	SL280UH090V60C	10084949
XP16-036-230	37800	16	13	33200	21800	3.18	2.58	8.5	C37-43C	SL280UH090XV60C	10084977
XP16-036-230	37600	16	13	33200	21800	3.16	2.56	8.5	C37-43C	SL280UH110V60C	10084987
XP16-036-230	37600	16	13	33200	21800	3.16	2.56	8.5	C37-43C	SL280UH110XV60C	10084951
XP16-036-230	37200	16	13	33000	21800	3.12	2.56	8.5	C37-43C	SLP98UH090XV36C	10084982
XP16-036-230	37000	16	13	33000	21600	3.1	2.54	8.5	C37-43C	SLP98UH090XV48C	10084972
XP16-036-230	37800	16	13	33400	22000	3.18	2.58	8.5	C37-43C	SLP98UH090XV60C	10084956
XP16-036-230	37600	16	13	33200	21800	3.18	2.58	8.5	C37-43C	SLP98UH110XV60C	10084943
XP16-036-230	36800	14.5	12	33600	22400	2.96	2.42	8.2	C37-43C		10084112
XP16-036-230	37400	16	13	34000	23000	2.88	2.4	8.2	C37-50/60C	EL296UH090XV60C	10084933
XP16-036-230	37200	16	13	33600	22800	2.86	2.4	8.2	C37-50/60C	EL296UH110XV60C	10084935
XP16-036-230	37400	16	13	33800	22800	2.88	2.4	8.2	C37-50/60C	SL280UH090V60C	10084936
XP16-036-230	37400	16	13	33800	22800	2.88	2.4	8.2	C37-50/60C	SL280UH090XV60C	10084937
XP16-036-230	37400	16	13	34000	23000	2.88	2.4	8.2	C37-50/60C	SLP98UH090XV60C	10084934
XP16-036-230	37200	16	13	33600	22800	2.86	2.4	8.2	C37-50/60C	SLP98UH110XV60C	10084931
XP16-036-230	36000	16	12.5	35400	23000	3.46	2.66	9	CBA27UHE-042		10258587
XP16-036-230	36200	14.5	12	36800	24400	2.8	2.68	8.2	CBX25UH-036		7785904
XP16-036-230	36200	16	12.5	34600	23200	3.18	2.58	8.5	CBX25UHV-036		7785792
XP16-036-230	36200	15.5	12.5	34400	23000	3.2	2.6	9	CBX27UH-036		7785786
XP16-036-230	37600	16	13	34200	23400	3.36	2.84	9.5	CBX27UH-042		7785903
XP16-036-230	35600	14.5	12	34800	23400	3.12	2.52	8.7	CBX32M-036		7785785
XP16-036-230	36400	16.5	12.5	34600	23200	3.2	2.6	9	CBX32MV-036		7785784
XP16-036-230	37600	16	13	34200	23400	3.36	2.84	9.5	CBX32MV-048		7785901
XP16-036-230	36200	16	13	34400	23000	3.22	2.62	9	CBX40UHV-030		7785788
XP16-036-230	36200	16	12.5	34600	23200	3.22	2.6	9	CBX40UHV-036		7785787
XP16-036-230	37400	16	13.5	34400	23000	3.24	2.62	9	CBX40UHV-042		7785902
XP16-036-230	37400	16	13.5	34400	22800	3.26	2.64	8.5	CBX40UHV-048		7785783
XP16-036-230	38000	16	13	33000	22200	3.38	2.6	8.5	CH33-43B	EL180UH070E36B	7785898
XP16-036-230	38000	16	13	33000	22200	3.44	2.64	9	CH33-43B	EL180UH090E48B	7785896
XP16-036-230	37600	15.5	12.5	33200	22400	3.3	2.54	8.5	CH33-43B	EL195UH045XE36B	7785884
XP16-036-230	37800	15.5	12.5	33000	22400	3.3	2.56	8.5	CH33-43B	EL195UH070XE36B	7785889
XP16-036-230	37600	15.5	12.5	33200	22400	3.3	2.54	8.5	CH33-43B	EL296UH045XE36B	7785892

NOTES:

All matches with EL195E and ML180E gas furnaces require the use of a Blower Motor Relay Kit (**85W66**) for proper unit operation.

Ratings are AHRI certified to AHRI Standard 210/240 (with 25 ft. of connecting refrigerant lines);

- Cooling Ratings - 95°F outdoor air temperature and 80°F db/67°F wb entering indoor coil air.
- High Temperature Heating Ratings - 47°F db/43°F wb outdoor air temperature and 70°F db entering indoor coil air.
- Low Temperature Heating Ratings - 17°F db/15°F wb outdoor air temperature and 70°F db entering indoor coil air.

All ratings include the use of a blower time delay relay (TDR). All Lennox variable-speed Furnaces and Air Handlers have time delay capabilities. Other Furnaces and Air Handlers may require an optional time delay relay (**58M81**) for field installation. See furnace or air handler specifications to determine if relay is needed.

Also see TXV Substitution Table at the beginning of the Heat Pump AHRI System Matches section.

When used with gas furnaces, a dual-fuel control, a control system with dual-fuel capabilities (LZP-2 or LZP-4), or a thermostat with dual-fuel capabilities must be used (ordered extra).

To convert HSPF from Region IV to Region V - Divide by 1.15.

AHRI SYSTEM MATCHES

Model No.	Cooling Capacity	SEER	EER	Heat Capacity		Heat COP		HSPF (IV)	Coil or Air Handler	Furnace	AHRI Reference
				High	Low	High	Low				
XP16-036-230	37800	16	12.5	33000	22400	3.34	2.58	8.5	CH33-43B	EL296UH045XV36B	7785905
XP16-036-230	37800	15.5	12.5	33000	22400	3.3	2.56	8.5	CH33-43B	EL296UH070XE36B	7785894
XP16-036-230	37800	16	12.5	33000	22200	3.36	2.58	8.5	CH33-43B	EL296UH070XV36B	7785906
XP16-036-230	37800	16	13	32600	22000	3.4	2.64	8.5	CH33-43B	SL280UH090V36B	7785897
XP16-036-230	38000	16	13	32800	22000	3.4	2.62	8.5	CH33-43B	SL280UH090V48B	7785895
XP16-036-230	38000	16	13	32800	22000	3.4	2.62	8.5	CH33-43B	SL280UH090XV48B	7785891
XP16-036-230	37800	16	12.5	33000	22200	3.36	2.58	8.5	CH33-43B	SLP98UH070XV36B	7785899
XP16-036-230	37400	14.5	12	33200	22600	3.22	2.5	8.5	CH33-43B		7785777
XP16-036-230	37400	16	13	33000	21800	3.16	2.58	8.5	CH33-43C	EL195UH090XE48C	7785900
XP16-036-230	37400	16	13	33000	21800	3.16	2.58	8.5	CH33-43C	EL296UH090XE48C	7785885
XP16-036-230	37400	16	13	32400	21800	3.32	2.56	8.5	CH33-43C	EL296UH090XV36C	7785890
XP16-036-230	37200	16	13	32400	21800	3.32	2.58	8.5	CH33-43C	EL296UH090XV48C	7785893
XP16-036-230	38000	16	13	32800	22000	3.36	2.58	8.5	CH33-43C	EL296UH090XV60C	7785790
XP16-036-230	37800	16	13	32600	22000	3.36	2.6	8.5	CH33-43C	EL296UH110XV60C	7785791
XP16-036-230	38000	16	13	32800	22000	3.36	2.58	8.5	CH33-43C	SL280UH090V60C	7785883
XP16-036-230	38000	16	13	32600	22000	3.38	2.62	8.5	CH33-43C	SL280UH090XV60C	7785888
XP16-036-230	37800	16	13	32600	22000	3.36	2.6	8.5	CH33-43C	SL280UH110V60C	7785880
XP16-036-230	37800	16	13	32600	22000	3.34	2.58	8.5	CH33-43C	SL280UH110XV60C	7785868
XP16-036-230	37400	16	13	32400	21800	3.32	2.56	8.5	CH33-43C	SLP98UH090XV36C	7785872
XP16-036-230	37200	16	13	32400	21800	3.32	2.58	8.5	CH33-43C	SLP98UH090XV48C	7785853
XP16-036-230	38000	16	13	32800	22000	3.36	2.58	8.5	CH33-43C	SLP98UH090XV60C	7785876
XP16-036-230	37800	16	13	32600	22000	3.36	2.6	8.5	CH33-43C	SLP98UH110XV60C	7785860
XP16-036-230	36800	14.5	12	33600	22400	3.02	2.44	8.2	CH33-43C		7785779
XP16-036-230	37000	16	13	33000	21800	3.16	2.54	8.5	CH33-48C	EL195UH090XE48C	7785855
XP16-036-230	37000	16	13	33000	21800	3.16	2.54	8.5	CH33-48C	EL296UH090XE48C	7785866
XP16-036-230	37000	16	13	33000	21800	3.16	2.54	8.5	CH33-48C	EL296UH090XV36C	7785881
XP16-036-230	36800	16	13	32800	21800	3.14	2.56	8.5	CH33-48C	EL296UH090XV48C	7785877
XP16-036-230	37600	16	13	33200	22000	3.2	2.56	8.5	CH33-48C	EL296UH090XV60C	7785869
XP16-036-230	37400	16	13	33000	21800	3.2	2.56	8.5	CH33-48C	EL296UH110XV60C	7785873
XP16-036-230	37600	16	13	33200	22000	3.24	2.6	8.5	CH33-48C	SL280UH090V60C	7785854
XP16-036-230	37600	16	13	33200	22000	3.24	2.6	8.5	CH33-48C	SL280UH090XV60C	7785865
XP16-036-230	37200	16	13	33200	22000	3.2	2.56	8.5	CH33-48C	SL280UH110V60C	7785861
XP16-036-230	37200	16	13	33200	22000	3.2	2.56	8.5	CH33-48C	SL280UH110XV60C	7785863
XP16-036-230	37000	16	13	33000	21800	3.16	2.54	8.5	CH33-48C	SLP98UH090XV36C	7785882
XP16-036-230	36800	16	13	32800	21800	3.14	2.56	8.5	CH33-48C	SLP98UH090XV48C	7785878
XP16-036-230	37600	16	13	33200	22000	3.2	2.56	8.5	CH33-48C	SLP98UH090XV60C	7785870
XP16-036-230	37400	16	13	33000	21800	3.2	2.56	8.5	CH33-48C	SLP98UH110XV60C	7785874
XP16-036-230	36400	14.5	12	33600	22400	3	2.42	8.2	CH33-48C		7785780
XP16-036-230	36400	16	13	35800	22400	3	2.68	8.5	CR33-48B	EL180DF070E36B	7785859
XP16-036-230	36600	15.5	12	36400	23000	2.96	2.6	8.5	CR33-48B	EL195DF045XE36B	7785862
XP16-036-230	36400	15.5	12.5	36000	22600	3	2.64	8.7	CR33-48B	EL195DF070XE48B	7785864
XP16-036-230	36600	15.5	12	36400	23000	2.96	2.6	8.5	CR33-48B	EL296DF045XE36B	7785871
XP16-036-230	36400	15.5	12.5	36000	22600	3	2.64	8.7	CR33-48B	EL296DF070XE48B	7785879
XP16-036-230	36000	15	12.5	36000	22800	2.96	2.62	8.5	CR33-48B	EL296DF070XV48B	8203819
XP16-036-230	36600	16	12.5	36000	22600	3.02	2.66	8.5	CR33-48B	SL280DF090V48B	7785875
XP16-036-230	36200	16	12.5	36000	22600	2.98	2.64	8.5	CR33-48B	SLP98DF070XV36B	7785887

NOTES:

All matches with EL195E and ML180E gas furnaces require the use of a Blower Motor Relay Kit (**85W66**) for proper unit operation.

Ratings are AHRI certified to AHRI Standard 210/240 (with 25 ft. of connecting refrigerant lines);

- Cooling Ratings - 95°F outdoor air temperature and 80°F db/67°F wb entering indoor coil air.
- High Temperature Heating Ratings - 47°F db/43°F wb outdoor air temperature and 70°F db entering indoor coil air.
- Low Temperature Heating Ratings - 17°F db/15°F wb outdoor air temperature and 70°F db entering indoor coil air.

All ratings include the use of a blower time delay relay (TDR). All Lennox variable-speed Furnaces and Air Handlers have time delay capabilities. Other Furnaces and Air Handlers may require an optional time delay relay (**58M81**) for field installation. See furnace or air handler specifications to determine if relay is needed.

Also see TXV Substitution Table at the beginning of the Heat Pump AHRI System Matches section.

When used with gas furnaces, a dual-fuel control, a control system with dual-fuel capabilities (LZP-2 or LZP-4), or a thermostat with dual-fuel capabilities must be used (ordered extra).

To convert HSPF from Region IV to Region V - Divide by 1.15.

AHRI SYSTEM MATCHES

Model No.	Cooling Capacity	SEER	EER	Heat Capacity		Heat COP		HSPF (IV)	Coil or Air Handler	Furnace	AHRI Reference
				High	Low	High	Low				
XP16-036-230	36000	14	11.5	36600	23200	2.88	2.54	8.2	CR33-48B		7785778
XP16-036-230	37200	16	13	36000	22600	3.08	2.72	8.5	CR33-48C	SL280DF090V60C	7785856
XP16-036-230	36800	16	13	36000	22600	3.06	2.72	8.5	CR33-48C	SL280DF110V60C	7785867
XP16-036-230	36600	16	12.5	36000	22600	3	2.66	8.5	CR33-48C	SLP98DF090XV36C	7785886
XP16-036-230	36600	16	12.5	36000	22600	3.02	2.68	8.5	CR33-48C	SLP98DF090XV48C	7785818
XP16-036-230	36800	16	12.5	36200	22600	3.06	2.68	8.5	CR33-48C	SLP98DF090XV60C	7785851
XP16-036-230	36800	16	12.5	36200	22800	3.06	2.7	8.5	CR33-48C	SLP98DF110XV60C	7785840
XP16-036-230	37000	16	13	32800	21600	3.1	2.56	8.5	CX34-43	EL180UH070E36B	7785852
XP16-036-230	37000	15.5	12.5	33600	22200	3.02	2.46	8.5	CX34-43	EL195UH045XE36B	7785813
XP16-036-230	37000	16	12.5	33200	21800	3.08	2.52	8.5	CX34-43	EL195UH070XE36B	7785823
XP16-036-230	37200	16	13	33000	21800	3.1	2.56	8.5	CX34-43	EL195UH090XE48C	7785835
XP16-036-230	37000	15.5	12.5	33600	22200	3.02	2.46	8.5	CX34-43	EL296UH045XE36B	7785846
XP16-036-230	37000	16	12.5	33200	21800	3.08	2.52	8.5	CX34-43	EL296UH070XE36B	7785857
XP16-036-230	37200	16	12.5	33200	22000	3.06	2.52	8.5	CX34-43	EL296UH070XV36B	7785819
XP16-036-230	37200	16	13	33000	21800	3.1	2.56	8.5	CX34-43	EL296UH090XE48C	7785858
XP16-036-230	37200	16	13	33000	21800	3.12	2.56	8.5	CX34-43	EL296UH090XV36C	7785820
XP16-036-230	37000	16	13	33000	21600	3.1	2.54	8.5	CX34-43	EL296UH090XV48C	7785841
XP16-036-230	37800	16	13	33400	22000	3.18	2.58	8.5	CX34-43	EL296UH090XV60C	7785830
XP16-036-230	37600	16	13	33200	21800	3.18	2.58	8.5	CX34-43	EL296UH110XV60C	7785825
XP16-036-230	37200	16	13	32800	21600	3.12	2.56	8.5	CX34-43	SL280UH090V36B	7785829
XP16-036-230	37200	16	13	33000	21800	3.12	2.58	8.5	CX34-43	SL280UH090V48B	7785824
XP16-036-230	37800	16	13	33200	21800	3.18	2.58	8.5	CX34-43	SL280UH090V60C	7785801
XP16-036-230	37200	16	13	33000	21800	3.12	2.58	8.5	CX34-43	SL280UH090XV48B	7785800
XP16-036-230	37800	16	13	33200	21800	3.18	2.58	8.5	CX34-43	SL280UH090XV60C	7785807
XP16-036-230	37400	16	13	33200	21800	3.14	2.56	8.5	CX34-43	SL280UH110V60C	7785836
XP16-036-230	37400	16	13	33200	21800	3.14	2.56	8.5	CX34-43	SL280UH110XV60C	7785847
XP16-036-230	37200	16	12.5	33200	22000	3.06	2.52	8.5	CX34-43	SLP98UH070XV36B	7785806
XP16-036-230	37200	16	13	33000	21800	3.12	2.56	8.5	CX34-43	SLP98UH090XV36C	7785821
XP16-036-230	37000	16	13	33000	21600	3.1	2.54	8.5	CX34-43	SLP98UH090XV48C	7785842
XP16-036-230	37800	16	13	33400	22000	3.18	2.58	8.5	CX34-43	SLP98UH090XV60C	7785831
XP16-036-230	37600	16	13	33200	21800	3.18	2.58	8.5	CX34-43	SLP98UH110XV60C	7785826
XP16-036-230	36800	14.5	12	33600	22400	2.96	2.42	8.2	CX34-43		7785781
XP16-036-230	37400	16	13	34000	23000	2.88	2.4	8.2	CX34-50/60C	EL296UH090XV60C	7785814
XP16-036-230	37200	16	13	33600	22800	2.86	2.4	8.2	CX34-50/60C	EL296UH110XV60C	7785816
XP16-036-230	37400	16	13	33800	22800	2.88	2.4	8.2	CX34-50/60C	SL280UH090V60C	7785793
XP16-036-230	37400	16.5	13	33800	22800	2.88	2.4	8.2	CX34-50/60C	SL280UH090XV60C	7785799
XP16-036-230	37400	16	13	34000	23000	2.88	2.4	8.2	CX34-50/60C	SLP98UH090XV60C	7785815
XP16-036-230	37400	16	13	33600	22800	2.86	2.4	8.2	CX34-50/60C	SLP98UH110XV60C	7785805
XP16-036-230	37000	16	13	32800	21600	3.1	2.56	8.5	CX38-43B	EL180UH070E36B	10084988
XP16-036-230	37000	15.5	12.5	33600	22200	3.02	2.46	8.5	CX38-43B	EL195UH045XE36B	10084952
XP16-036-230	37000	16	12.5	33200	21800	3.08	2.52	8.5	CX38-43B	EL195UH070XE36B	10084961
XP16-036-230	37000	15.5	12.5	33600	22200	3.02	2.46	8.5	CX38-43B	EL296UH045XE36B	10084983
XP16-036-230	37000	16	12.5	33200	21800	3.08	2.52	8.5	CX38-43B	EL296UH070XE36B	10084989
XP16-036-230	37200	16	12.5	33200	22000	3.06	2.52	8.5	CX38-43B	EL296UH070XV36B	10084957
XP16-036-230	37200	16	13	32800	21600	3.12	2.56	8.5	CX38-43B	SL280UH090V36B	10084967
XP16-036-230	37200	16	13	33000	21800	3.12	2.58	8.5	CX38-43B	SL280UH090V48B	10084962

NOTES:

All matches with EL195E and ML180E gas furnaces require the use of a Blower Motor Relay Kit (**85W66**) for proper unit operation.

Ratings are AHRI certified to AHRI Standard 210/240 (with 25 ft. of connecting refrigerant lines);

- Cooling Ratings - 95°F outdoor air temperature and 80°F db/67°F wb entering indoor coil air.
- High Temperature Heating Ratings - 47°F db/43°F wb outdoor air temperature and 70°F db entering indoor coil air.
- Low Temperature Heating Ratings - 17°F db/15°F wb outdoor air temperature and 70°F db entering indoor coil air.

All ratings include the use of a blower time delay relay (TDR). All Lennox variable-speed Furnaces and Air Handlers have time delay capabilities. Other Furnaces and Air Handlers may require an optional time delay relay (**58M81**) for field installation. See furnace or air handler specifications to determine if relay is needed.

Also see TXV Substitution Table at the beginning of the Heat Pump AHRI System Matches section.

When used with gas furnaces, a dual-fuel control, a control system with dual-fuel capabilities (LZP-2 or LZP-4), or a thermostat with dual-fuel capabilities must be used (ordered extra).

To convert HSPF from Region IV to Region V - Divide by 1.15.

AHRI SYSTEM MATCHES

Model No.	Cooling Capacity	SEER	EER	Heat Capacity		Heat COP		HSPF (IV)	Coil or Air Handler	Furnace	AHRI Reference
				High	Low	High	Low				
XP16-036-230	37200	16	13	33000	21800	3.12	2.58	8.5	CX38-43B	SL280UH090XV48B	10084939
XP16-036-230	37200	16	12.5	33200	22000	3.06	2.52	8.5	CX38-43B	SLP98UH070XV36B	10084945
XP16-036-230	36800	14.5	12	33600	22400	2.96	2.42	8.2	CX38-43B		10086664
XP16-036-230	37200	16	13	33000	21800	3.1	2.56	8.5	CX38-43C	EL195UH090XE48C	10084973
XP16-036-230	37200	16	13	33000	21800	3.1	2.56	8.5	CX38-43C	EL296UH090XE48C	10084990
XP16-036-230	37200	16	13	33000	21800	3.12	2.56	8.5	CX38-43C	EL296UH090XV36C	10084958
XP16-036-230	37000	16	13	33000	21600	3.1	2.54	8.5	CX38-43C	EL296UH090XV48C	10084978
XP16-036-230	37800	16	13	33400	22000	3.18	2.58	8.5	CX38-43C	EL296UH090XV60C	10084968
XP16-036-230	37600	16	13	33200	21800	3.18	2.58	8.5	CX38-43C	EL296UH110XV60C	10084963
XP16-036-230	37800	16	13	33200	21800	3.18	2.58	8.5	CX38-43C	SL280UH090V60C	10084940
XP16-036-230	37800	16	13	33200	21800	3.18	2.58	8.5	CX38-43C	SL280UH090XV60C	10084946
XP16-036-230	37400	16	13	33200	21800	3.14	2.56	8.5	CX38-43C	SL280UH110V60C	10084974
XP16-036-230	37400	16	13	33200	21800	3.14	2.56	8.5	CX38-43C	SL280UH110XV60C	10084984
XP16-036-230	37200	16	13	33000	21800	3.12	2.56	8.5	CX38-43C	SLP98UH090XV36C	10084959
XP16-036-230	37000	16	13	33000	21600	3.1	2.54	8.5	CX38-43C	SLP98UH090XV48C	10084979
XP16-036-230	37800	16	13	33400	22000	3.18	2.58	8.5	CX38-43C	SLP98UH090XV60C	10084969
XP16-036-230	37600	16	13	33200	21800	3.18	2.58	8.5	CX38-43C	SLP98UH110XV60C	10084964
XP16-036-230	36800	14.5	12	33600	22400	2.96	2.42	8.2	CX38-43C		10086665
XP16-036-230	37400	16	13	34000	23000	2.88	2.4	8.2	CX38-50/60C	EL296UH090XV60C	10084953
XP16-036-230	37200	16	13	33600	22800	2.86	2.4	8.2	CX38-50/60C	EL296UH110XV60C	10084955
XP16-036-230	37400	16	13	33800	22800	2.88	2.4	8.2	CX38-50/60C	SL280UH090V60C	10084932
XP16-036-230	37400	16.5	13	33800	22800	2.88	2.4	8.2	CX38-50/60C	SL280UH090XV60C	10084938
XP16-036-230	37400	16	13	34000	23000	2.88	2.4	8.2	CX38-50/60C	SLP98UH090XV60C	10084954
XP16-036-230	37400	16	13	33600	22800	2.86	2.4	8.2	CX38-50/60C	SLP98UH110XV60C	10084944
XP16-048-230	47000	15.5	12	41500	28000	3.46	2.58	9	C33-62C	EL180UH090E60C	7785931
XP16-048-230	47500	15	11.5	42000	28600	3.44	2.56	9	C33-62C	EL180UH110E60C	7785924
XP16-048-230	47000	15	12	41500	28200	3.4	2.54	8.7	C33-62C	EL195UH090XE48C	7785914
XP16-048-230	47000	15	12	41500	28200	3.44	2.56	9	C33-62C	EL195UH110XE60C	7785917
XP16-048-230	47000	15	12	41500	28200	3.4	2.54	8.7	C33-62C	EL296UH090XE48C	7785915
XP16-048-230	47000	15	12	41500	28200	3.44	2.56	9	C33-62C	EL296UH110XE60C	7785918
XP16-048-230	46500	15	11.5	42000	28000	3.22	2.36	8.2	C35-49C	EL180UH090E60C	9910856
XP16-048-230	47000	15	11.5	42500	28600	3.22	2.36	8.2	C35-49C	EL180UH110E60C	9910857
XP16-048-230	46500	15	11.5	42000	28000	3.2	2.34	8.2	C35-49C	EL195UH110XE60C	9910858
XP16-048-230	46500	15	11.5	42500	28400	3.2	2.34	8.2	C35-49C	EL296UH090XV48C	9910859
XP16-048-230	46500	15	11.5	42500	28400	3.2	2.34	8.2	C35-49C	EL296UH090XV60C	9910860
XP16-048-230	46500	15	11.5	42000	28000	3.2	2.34	8.2	C35-49C	EL296UH110XE60C	9910862
XP16-048-230	46500	15	11.5	42000	28200	3.18	2.36	8.2	C35-49C	EL296UH110XV48C	9910861
XP16-048-230	46500	15	11.5	42500	28200	3.22	2.34	8.2	C35-49C	EL296UH110XV60C	9910863
XP16-048-230	46500	15.5	11.5	42000	28000	3.22	2.36	8.2	C35-49C	SL280UH090V60C	9910864
XP16-048-230	46500	15.5	11.5	42000	28000	3.22	2.36	8.2	C35-49C	SL280UH090XV60C	9910865
XP16-048-230	46500	15.5	11.5	42000	28000	3.22	2.36	8.2	C35-49C	SL280UH110V60C	9910866
XP16-048-230	46500	15.5	11.5	42000	28000	3.22	2.36	8.2	C35-49C	SL280UH110XV60C	9910867
XP16-048-230	46500	15	11.5	42000	28200	3.18	2.34	8.2	C35-49C	SLP98UH090XV48C	9910868
XP16-048-230	47000	15.5	12	43000	26000	3.52	2.32	8.2	C35-60C	EL180UH090E60C	9910869
XP16-048-230	47500	15.5	11.5	44000	26600	3.54	2.32	8.2	C35-60C	EL180UH110E60C	9910870
XP16-048-230	46500	15	11.5	43500	26200	3.5	2.3	8.2	C35-60C	EL195UH090XE48C	9910871

NOTES:

All matches with EL195E and ML180E gas furnaces require the use of a Blower Motor Relay Kit (**85W66**) for proper unit operation.

Ratings are AHRI certified to AHRI Standard 210/240 (with 25 ft. of connecting refrigerant lines);

- Cooling Ratings - 95°F outdoor air temperature and 80°F db/67°F wb entering indoor coil air.
- High Temperature Heating Ratings - 47°F db/43°F wb outdoor air temperature and 70°F db entering indoor coil air.
- Low Temperature Heating Ratings - 17°F db/15°F wb outdoor air temperature and 70°F db entering indoor coil air.

All ratings include the use of a blower time delay relay (TDR). All Lennox variable-speed Furnaces and Air Handlers have time delay capabilities. Other Furnaces and Air Handlers may require an optional time delay relay (**58M81**) for field installation. See furnace or air handler specifications to determine if relay is needed.

Also see TXV Substitution Table at the beginning of the Heat Pump AHRI System Matches section.

When used with gas furnaces, a dual-fuel control, a control system with dual-fuel capabilities (LZP-2 or LZP-4), or a thermostat with dual-fuel capabilities must be used (ordered extra).

To convert HSPF from Region IV to Region V - Divide by 1.15.

AHRI SYSTEM MATCHES

Model No.	Cooling Capacity	SEER	EER	Heat Capacity		Heat COP		HSPF (IV)	Coil or Air Handler	Furnace	AHRI Reference
				High	Low	High	Low				
XP16-048-230	47000	15.5	11.5	43500	26000	3.52	2.3	8.2	C35-60C	EL195UH110XE60C	9910872
XP16-048-230	46500	15	11.5	43500	26200	3.5	2.3	8.2	C35-60C	EL296UH090XE48C	9910873
XP16-048-230	47000	15.5	11.5	44000	26400	3.52	2.28	8.2	C35-60C	EL296UH090XV48C	9910874
XP16-048-230	47000	15.5	11.5	44000	26400	3.52	2.28	8.2	C35-60C	EL296UH090XV60C	9910875
XP16-048-230	47000	15.5	11.5	43500	26000	3.52	2.3	8.2	C35-60C	EL296UH110XE60C	9910877
XP16-048-230	47000	15.5	11.5	43500	26200	3.52	2.3	8.2	C35-60C	EL296UH110XV48C	9910876
XP16-048-230	47000	15.5	11.5	43500	26200	3.5	2.28	8.2	C35-60C	EL296UH110XV60C	9910878
XP16-048-230	47000	15.5	11.5	43500	26000	3.54	2.32	8.2	C35-60C	SL280UH090V60C	9910879
XP16-048-230	47000	15.5	11.5	43500	26000	3.54	2.32	8.2	C35-60C	SL280UH090XV60C	9910880
XP16-048-230	47000	15.5	11.5	43500	26000	3.54	2.32	8.2	C35-60C	SL280UH110V60C	9910881
XP16-048-230	47000	15.5	11.5	43500	26000	3.54	2.32	8.2	C35-60C	SL280UH110XV60C	9910882
XP16-048-230	47000	15.5	11.5	43500	26200	3.5	2.3	8.2	C35-60C	SLP98UH090XV48C	9910883
XP16-048-230	47000	15.5	11.5	43500	26200	3.5	2.3	8.2	C35-60C	SLP98UH090XV60C	9910884
XP16-048-230	47000	15.5	11.5	43500	26200	3.5	2.28	8.2	C35-60C	SLP98UH110XV60C	9910885
XP16-048-230	47500	15.5	12	43000	28200	3.24	2.36	8.2	C35-60D	SL280UH135V60D	9910886
XP16-048-230	48000	15.5	12	43000	28400	3.24	2.36	8.2	C35-60D	SLP98UH135XV60D	9910887
XP16-048-230	47000	15.5	12	41500	28000	3.46	2.58	9	C37-62C	EL180UH090E60C	10084996
XP16-048-230	47500	15	11.5	42000	28600	3.44	2.56	9	C37-62C	EL180UH110E60C	10084995
XP16-048-230	47000	15	12	41500	28200	3.4	2.54	8.7	C37-62C	EL195UH090XE48C	10084991
XP16-048-230	47000	15	12	41500	28200	3.44	2.56	9	C37-62C	EL195UH110XE60C	10084993
XP16-048-230	47000	15	12	41500	28200	3.4	2.54	8.7	C37-62C	EL296UH090XE48C	10084992
XP16-048-230	47000	15	12	41500	28200	3.44	2.56	9	C37-62C	EL296UH110XE60C	10084994
XP16-048-230	47500	16	12	45000	30000	3.44	2.62	9	CBA27UHE-048		10258588
XP16-048-230	47000	15	11.5	44500	27400	3.58	2.68	9	CBA27UHE-060		10258974
XP16-048-230	47500	15	12	44000	29400	3.48	2.56	8.5	CBX25UHV-048		7785919
XP16-048-230	48500	16	12.5	45000	29800	3.4	2.64	9	CBX27UH-048		7785916
XP16-048-230	47500	15.5	11.5	44500	27200	3.58	2.54	9	CBX27UH-060		7785972
XP16-048-230	48000	15.5	12	45500	30200	3.32	2.58	8.7	CBX32M-048		7785973
XP16-048-230	48000	16	12.5	45500	30000	3.38	2.62	8.5	CBX32MV-048		7785968
XP16-048-230	48500	16	12.5	45000	30800	3.56	2.72	9.5	CBX32MV-060		7785913
XP16-048-230	48000	16	12.5	41000	26600	3.36	2.46	8.5	CBX32MV-068		7785962
XP16-048-230	48000	16	12.5	45500	30000	3.38	2.6	8.5	CBX40UHV-048		7785969
XP16-048-230	48500	16	12.5	45000	31000	3.6	2.76	9.5	CBX40UHV-060		7785970
XP16-048-230	48500	16	12.5	45000	29200	3.62	2.62	9	CH23-68	EL180UH090E60C	7785921
XP16-048-230	48500	16	12.5	45000	29200	3.6	2.62	9	CH23-68	EL180UH110E60C	7785923
XP16-048-230	48500	16	12	45000	29400	3.56	2.58	8.5	CH23-68	EL195UH090XE48C	7785971
XP16-048-230	48500	16	12	45000	29400	3.58	2.6	9	CH23-68	EL195UH110XE60C	7785950
XP16-048-230	48500	16	12	45000	29400	3.56	2.58	8.5	CH23-68	EL296UH090XE48C	7785951
XP16-048-230	48500	16	12	45000	29400	3.58	2.6	9	CH23-68	EL296UH110XE60C	7785963
XP16-048-230	48500	16	12	45000	29400	3.62	2.62	9	CH23-68	EL296UH135XV60D	7785959
XP16-048-230	48500	16	12	45000	29200	3.6	2.6	9	CH23-68	SL280UH135V60D	7785965
XP16-048-230	48500	16	12	45500	29400	3.62	2.6	9	CH23-68	SLP98UH135XV60D	7785956
XP16-048-230	48000	14.5	11.5	45500	30000	3.44	2.52	8.5	CH23-68		7785907
XP16-048-230	48000	15	12	45500	31600	3.26	2.64	8.7	CH33-60D	EL296UH135XV60D	7785966
XP16-048-230	48000	15	12	45000	31400	3.22	2.64	8.7	CH33-60D	SL280UH135V60D	7785957
XP16-048-230	48500	15	12	45500	31600	3.26	2.64	8.7	CH33-60D	SLP98UH135XV60D	7785960

NOTES:

All matches with EL195E and ML180E gas furnaces require the use of a Blower Motor Relay Kit (**85W66**) for proper unit operation.

Ratings are AHRI certified to AHRI Standard 210/240 (with 25 ft. of connecting refrigerant lines);

- Cooling Ratings - 95°F outdoor air temperature and 80°F db/67°F wb entering indoor coil air.
- High Temperature Heating Ratings - 47°F db/43°F wb outdoor air temperature and 70°F db entering indoor coil air.
- Low Temperature Heating Ratings - 17°F db/15°F wb outdoor air temperature and 70°F db entering indoor coil air.

All ratings include the use of a blower time delay relay (TDR). All Lennox variable-speed Furnaces and Air Handlers have time delay capabilities. Other Furnaces and Air Handlers may require an optional time delay relay (**58M81**) for field installation. See furnace or air handler specifications to determine if relay is needed.

Also see TXV Substitution Table at the beginning of the Heat Pump AHRI System Matches section.

When used with gas furnaces, a dual-fuel control, a control system with dual-fuel capabilities (LZP-2 or LZP-4), or a thermostat with dual-fuel capabilities must be used (ordered extra).

To convert HSPF from Region IV to Region V - Divide by 1.15.

AHRI SYSTEM MATCHES

Model No.	Cooling Capacity	SEER	EER	Heat Capacity		Heat COP		HSPF (IV)	Coil or Air Handler	Furnace	AHRI Reference
				High	Low	High	Low				
XP16-048-230	47000	15	12	43500	28600	3.38	2.48	8.7	CH33-62D	EL296UH135XV60D	7785952
XP16-048-230	46500	15	12	43500	28600	3.4	2.5	8.7	CH33-62D	SL280UH135V60D	7785964
XP16-048-230	47000	15	12	43500	28800	3.38	2.5	8.7	CH33-62D	SLP98UH135XV60D	7785953
XP16-048-230	48000	15.5	11.5	43500	29600	3.12	2.34	8.2	CH35-51C	EL180UH090E60C	9910888
XP16-048-230	48000	15.5	11.5	43500	29600	3.1	2.32	8.2	CH35-51C	EL180UH110E60C	9910889
XP16-048-230	48000	15	11.5	43500	29600	3.1	2.32	8.2	CH35-51C	EL195UH110XE60C	9910890
XP16-048-230	47500	15.5	11.5	43000	29200	3.04	2.28	8.2	CH35-51C	EL296UH090XE48C	9910891
XP16-048-230	48000	15	11.5	43500	29600	3.1	2.32	8.2	CH35-51C	EL296UH110XE60C	9910893
XP16-048-230	47500	15.5	11.5	43000	29200	3.06	2.3	8.2	CH35-51C	EL296UH110XV60C	9910894
XP16-048-230	47500	15.5	12	43000	29000	3.1	2.3	8.2	CH35-51C	SL280UH090V60C	9910895
XP16-048-230	47500	15.5	12	43000	29000	3.1	2.3	8.2	CH35-51C	SL280UH090XV60C	9910896
XP16-048-230	47500	15.5	11.5	43000	29200	3.04	2.28	8.2	CH35-51C	SLP98UH090XV48C	9910897
XP16-048-230	47500	15.5	11.5	43000	29200	3.06	2.3	8.2	CH35-51C	SLP98UH110XV60C	9910898
XP16-048-230	47500	16	12.5	44000	30200	3.54	2.7	9.5	CR33-50/60	EL180DF110E60C	7785925
XP16-048-230	47000	15.5	12	44500	30400	3.48	2.64	9.2	CR33-50/60	EL195DF090XE48C	7785967
XP16-048-230	47000	16	12	44000	30200	3.5	2.68	9	CR33-50/60	EL195DF110XE60C	7785958
XP16-048-230	47000	15.5	12	44500	30400	3.48	2.64	9.2	CR33-50/60	EL296DF090XE48C	7785961
XP16-048-230	47000	16	12	44000	30200	3.5	2.68	9	CR33-50/60	EL296DF110XE60C	7785933
XP16-048-230	47000	16	12	44500	30600	3.48	2.64	9	CR33-50/60	EL296DF110XV60C	8688153
XP16-048-230	47000	16	12	44500	30400	3.48	2.64	9	CR33-50/60	SLP98DF090XV60C	7785948
XP16-048-230	47000	16	12	44500	30600	3.48	2.64	9	CR33-50/60	SLP98DF110XV60C	7785928
XP16-048-230	47000	14.5	11.5	44500	30800	3.38	2.6	9	CR33-50/60		7785908
XP16-048-230	47000	16	12	44500	30400	3.48	2.64	9	CR33-60	SLP98DF090XV60C	7785944
XP16-048-230	47000	16	12	44500	30400	3.48	2.62	9	CR33-60	SLP98DF110XV60C	7785938
XP16-048-230	47000	14.5	11.5	44500	30600	3.38	2.58	9	CR33-60		7785909
XP16-048-230	46500	15.5	11.5	43000	28800	3.34	2.5	8.5	CX34-60D	SL280UH135V60D	7785934
XP16-048-230	46500	16	11.5	43500	29000	3.36	2.5	8.5	CX34-60D	SLP98UH135XV60D	7785937
XP16-048-230	46000	14	11	43500	29400	3.22	2.42	8.2	CX34-60D		7785912
XP16-048-230	47000	15.5	12	41500	28000	3.46	2.58	9	CX34-62C	EL180UH090E60C	7785920
XP16-048-230	47500	15	11.5	42000	28600	3.44	2.56	9	CX34-62C	EL180UH110E60C	7785922
XP16-048-230	47000	15	12	41500	28200	3.4	2.54	8.7	CX34-62C	EL195UH090XE48C	7785929
XP16-048-230	47000	15	12	41500	28200	3.44	2.56	9	CX34-62C	EL195UH110XE60C	7785954
XP16-048-230	47000	15	12	41500	28200	3.4	2.54	8.7	CX34-62C	EL296UH090XE48C	7785945
XP16-048-230	47000	15.5	11.5	42000	28400	3.42	2.54	8.7	CX34-62C	EL296UH090XV48C	7785942
XP16-048-230	47000	15.5	11.5	42000	28400	3.42	2.54	8.7	CX34-62C	EL296UH090XV60C	7785935
XP16-048-230	47000	15	12	41500	28200	3.44	2.56	9	CX34-62C	EL296UH110XE60C	7785939
XP16-048-230	47000	15.5	12	41500	28200	3.42	2.56	8.7	CX34-62C	EL296UH110XV48C	7785926
XP16-048-230	47000	15.5	11.5	42000	28400	3.44	2.54	8.7	CX34-62C	EL296UH110XV60C	7785949
XP16-048-230	47000	15.5	12	41500	28200	3.46	2.58	9	CX34-62C	SL280UH090V60C	7785930
XP16-048-230	47000	15.5	12	41500	28200	3.46	2.58	9	CX34-62C	SL280UH090XV60C	7785955
XP16-048-230	47000	15.5	12	41500	28200	3.46	2.58	9	CX34-62C	SL280UH110V60C	7785946
XP16-048-230	47000	15.5	12	41500	28200	3.46	2.58	9	CX34-62C	SL280UH110XV60C	7785940
XP16-048-230	47000	15.5	11.5	42000	28200	3.44	2.54	8.7	CX34-62C	SLP98UH090XV48C	7785943
XP16-048-230	47000	15	11.5	42000	28200	3.46	2.54	8.7	CX34-62C	SLP98UH090XV60C	7785936
XP16-048-230	47000	15.5	11.5	42000	28400	3.44	2.54	8.7	CX34-62C	SLP98UH110XV60C	7785927
XP16-048-230	46500	14	11	42000	28800	3.32	2.5	8.5	CX34-62C		7785911

NOTES:

All matches with EL195E and ML180E gas furnaces require the use of a Blower Motor Relay Kit (**85W66**) for proper unit operation.

Ratings are AHRI certified to AHRI Standard 210/240 (with 25 ft. of connecting refrigerant lines);
- Cooling Ratings - 95°F outdoor air temperature and 80°F db/67°F wb entering indoor coil air.
- High Temperature Heating Ratings - 47°F db/43°F wb outdoor air temperature and 70°F db entering indoor coil air.
- Low Temperature Heating Ratings - 17°F db/15°F wb outdoor air temperature and 70°F db entering indoor coil air.

All ratings include the use of a blower time delay relay (TDR). All Lennox variable-speed Furnaces and Air Handlers have time delay capabilities. Other Furnaces and Air Handlers may require an optional time delay relay (**58M81**) for field installation. See furnace or air handler specifications to determine if relay is needed.

Also see TXV Substitution Table at the beginning of the Heat Pump AHRI System Matches section.

When used with gas furnaces, a dual-fuel control, a control system with dual-fuel capabilities (LZP-2 or LZP-4), or a thermostat with dual-fuel capabilities must be used (ordered extra).

To convert HSPF from Region IV to Region V - Divide by 1.15.

AHRI SYSTEM MATCHES

Model No.	Cooling Capacity	SEER	EER	Heat Capacity		Heat COP		HSPF (IV)	Coil or Air Handler	Furnace	AHRI Reference
				High	Low	High	Low				
XP16-048-230	48500	16	12	43000	27600	3.42	2.44	8.5	CX34-62D	EL296UH135XV60D	7785947
XP16-048-230	48000	16	12	42500	27600	3.4	2.46	8.5	CX34-62D	SL280UH135V60D	7785941
XP16-048-230	48500	16	12	43000	27800	3.44	2.46	8.5	CX34-62D	SLP98UH135XV60D	7785932
XP16-048-230	48000	15	11.5	43000	28200	3.28	2.4	8.2	CX34-62D		7785910
XP16-048-230	46500	15	11.5	42000	28000	3.22	2.36	8.2	CX35-49C	EL180UH090E60C	9910899
XP16-048-230	47000	15	11.5	42500	28600	3.22	2.36	8.2	CX35-49C	EL180UH110E60C	9910900
XP16-048-230	46500	15	11.5	42000	28000	3.2	2.34	8.2	CX35-49C	EL195UH110XE60C	9910901
XP16-048-230	46500	15	11.5	42500	28400	3.2	2.34	8.2	CX35-49C	EL296UH090XV48C	9910902
XP16-048-230	46500	15	11.5	42500	28400	3.2	2.34	8.2	CX35-49C	EL296UH090XV60C	9910903
XP16-048-230	46500	15	11.5	42000	28000	3.2	2.34	8.2	CX35-49C	EL296UH110XE60C	9910905
XP16-048-230	46500	15	11.5	42000	28200	3.18	2.36	8.2	CX35-49C	EL296UH110XV48C	9910904
XP16-048-230	46500	15	11.5	42500	28200	3.22	2.34	8.2	CX35-49C	EL296UH110XV60C	9910906
XP16-048-230	46500	15.5	11.5	42000	28000	3.22	2.36	8.2	CX35-49C	SL280UH090V60C	9910907
XP16-048-230	46500	15.5	11.5	42000	28000	3.22	2.36	8.2	CX35-49C	SL280UH090XV60C	9910908
XP16-048-230	46500	15.5	11.5	42000	28000	3.22	2.36	8.2	CX35-49C	SL280UH110V60C	9910909
XP16-048-230	46500	15.5	11.5	42000	28000	3.22	2.36	8.2	CX35-49C	SL280UH110XV60C	9910910
XP16-048-230	46500	15	11.5	42000	28200	3.18	2.34	8.2	CX35-49C	SLP98UH090XV48C	9910911
XP16-048-230	47000	15.5	12	43000	26000	3.52	2.32	8.2	CX35-60C	EL180UH090E60C	9910912
XP16-048-230	47500	15.5	11.5	44000	26600	3.54	2.32	8.2	CX35-60C	EL180UH110E60C	9910913
XP16-048-230	46500	15	11.5	43500	26200	3.5	2.3	8.2	CX35-60C	EL195UH090XE48C	9910914
XP16-048-230	47000	15.5	11.5	43500	26000	3.52	2.3	8.2	CX35-60C	EL195UH110XE60C	9910915
XP16-048-230	46500	15	11.5	43500	26200	3.5	2.3	8.2	CX35-60C	EL296UH090XE48C	9910916
XP16-048-230	47000	15.5	11.5	44000	26400	3.52	2.28	8.2	CX35-60C	EL296UH090XV48C	9910917
XP16-048-230	47000	15.5	11.5	44000	26400	3.52	2.28	8.2	CX35-60C	EL296UH090XV60C	9910918
XP16-048-230	47000	15.5	11.5	43500	26000	3.52	2.3	8.2	CX35-60C	EL296UH110XE60C	9910920
XP16-048-230	47000	15.5	11.5	43500	26200	3.52	2.3	8.2	CX35-60C	EL296UH110XV48C	9910919
XP16-048-230	47000	15.5	11.5	43500	26200	3.5	2.28	8.2	CX35-60C	EL296UH110XV60C	9910921
XP16-048-230	47000	15.5	11.5	43500	26000	3.54	2.32	8.2	CX35-60C	SL280UH090V60C	9910922
XP16-048-230	47000	15.5	11.5	43500	26000	3.54	2.32	8.2	CX35-60C	SL280UH090XV60C	9910923
XP16-048-230	47000	15.5	11.5	43500	26000	3.54	2.32	8.2	CX35-60C	SL280UH110V60C	9910924
XP16-048-230	47000	15.5	11.5	43500	26000	3.54	2.32	8.2	CX35-60C	SL280UH110XV60C	9910925
XP16-048-230	47000	15.5	11.5	43500	26200	3.5	2.3	8.2	CX35-60C	SLP98UH090XV48C	9910926
XP16-048-230	47000	15.5	11.5	43500	26200	3.5	2.3	8.2	CX35-60C	SLP98UH090XV60C	9910927
XP16-048-230	47000	15.5	11.5	43500	26200	3.5	2.28	8.2	CX35-60C	SLP98UH110XV60C	9910928
XP16-048-230	47500	15.5	12	43000	28200	3.24	2.36	8.2	CX35-60D	SL280UH135V60D	9910929
XP16-048-230	48000	15.5	12	43000	28400	3.24	2.36	8.2	CX35-60D	SLP98UH135XV60D	9910930
XP16-048-230	46500	15.5	11.5	43000	28800	3.34	2.5	8.5	CX38-60D	SL280UH135V60D	10086733
XP16-048-230	46500	16	11.5	43500	29000	3.36	2.5	8.5	CX38-60D	SLP98UH135XV60D	10086735
XP16-048-230	46000	14	11	43500	29400	3.22	2.42	8.2	CX38-60D		10086667
XP16-048-230	47000	15.5	12	41500	28000	3.46	2.58	9	CX38-62C	EL180UH090E60C	10086727
XP16-048-230	47500	15	11.5	42000	28600	3.44	2.56	9	CX38-62C	EL180UH110E60C	10086728
XP16-048-230	47000	15	12	41500	28200	3.4	2.54	8.7	CX38-62C	EL195UH090XE48C	10086731
XP16-048-230	47000	15	12	41500	28200	3.44	2.56	9	CX38-62C	EL195UH110XE60C	10086743
XP16-048-230	47000	15	12	41500	28200	3.4	2.54	8.7	CX38-62C	EL296UH090XE48C	10086740
XP16-048-230	47000	15.5	11.5	42000	28400	3.42	2.54	8.7	CX38-62C	EL296UH090XV48C	10086738
XP16-048-230	47000	15.5	11.5	42000	28400	3.42	2.54	8.7	CX38-62C	EL296UH090XV60C	10086902

NOTES:

All matches with EL195E and ML180E gas furnaces require the use of a Blower Motor Relay Kit (**85W66**) for proper unit operation.

Ratings are AHRI certified to AHRI Standard 210/240 (with 25 ft. of connecting refrigerant lines);

- Cooling Ratings - 95°F outdoor air temperature and 80°F db/67°F wb entering indoor coil air.
- High Temperature Heating Ratings - 47°F db/43°F wb outdoor air temperature and 70°F db entering indoor coil air.
- Low Temperature Heating Ratings - 17°F db/15°F wb outdoor air temperature and 70°F db entering indoor coil air.

All ratings include the use of a blower time delay relay (TDR). All Lennox variable-speed Furnaces and Air Handlers have time delay capabilities. Other Furnaces and Air Handlers may require an optional time delay relay (**58M81**) for field installation. See furnace or air handler specifications to determine if relay is needed.

Also see TXV Substitution Table at the beginning of the Heat Pump AHRI System Matches section.

When used with gas furnaces, a dual-fuel control, a control system with dual-fuel capabilities (LZP-2 or LZP-4), or a thermostat with dual-fuel capabilities must be used (ordered extra).

To convert HSPF from Region IV to Region V - Divide by 1.15.

AHRI SYSTEM MATCHES

Model No.	Cooling Capacity	SEER	EER	Heat Capacity		Heat COP		HSPF (IV)	Coil or Air Handler	Furnace	AHRI Reference
				High	Low	High	Low				
XP16-048-230	47000	15	12	41500	28200	3.44	2.56	9	CX38-62C	EL296UH110XE60C	10086736
XP16-048-230	47000	15.5	12	41500	28200	3.42	2.56	8.7	CX38-62C	EL296UH110XV48C	10086729
XP16-048-230	47000	15.5	11.5	42000	28400	3.44	2.54	8.7	CX38-62C	EL296UH110XV60C	10086742
XP16-048-230	47000	15.5	12	41500	28200	3.46	2.58	9	CX38-62C	SL280UH090V60C	10086732
XP16-048-230	47000	15.5	12	41500	28200	3.46	2.58	9	CX38-62C	SL280UH090XV60C	10086744
XP16-048-230	47000	15.5	12	41500	28200	3.46	2.58	9	CX38-62C	SL280UH110V60C	10086741
XP16-048-230	47000	15.5	12	41500	28200	3.46	2.58	9	CX38-62C	SL280UH110XV60C	10086737
XP16-048-230	47000	15.5	11.5	42000	28200	3.44	2.54	8.7	CX38-62C	SLP98UH090XV48C	10086739
XP16-048-230	47000	15	11.5	42000	28200	3.46	2.54	8.7	CX38-62C	SLP98UH090XV60C	10086734
XP16-048-230	47000	15.5	11.5	42000	28400	3.44	2.54	8.7	CX38-62C	SLP98UH110XV60C	10086730
XP16-048-230	46500	14	11	42000	28800	3.32	2.5	8.5	CX38-62C		10086666
XP16-048-230	48500	16	12	43000	27600	3.42	2.44	8.5	CX38-62D	EL296UH135XV60D	10084999
XP16-048-230	48000	16	12	42500	27600	3.4	2.46	8.5	CX38-62D	SL280UH135V60D	10084998
XP16-048-230	48500	16	12	43000	27800	3.44	2.46	8.5	CX38-62D	SLP98UH135XV60D	10084997
XP16-048-230	48000	15	11.5	43000	28200	3.28	2.4	8.2	CX38-62D		10084113
XP16-060-230	58500	15.7	12.2	53000	34800	3.22	2.38	8.5	C33-62D	EL180UH135E60D	7785992
XP16-060-230	58000	15.2	11.5	53000	35200	3.18	2.36	8.2	C33-62D	EL195UH135XE60D	7785987
XP16-060-230	58000	15.2	11.5	53000	35200	3.18	2.36	8.2	C33-62D	EL296UH135XE60D	7785985
XP16-060-230	58500	15.7	12	53000	34800	3.22	2.38	8.5	C33-62D	EL296UH135XV60D	7785990
XP16-060-230	58000	15.7	12	53000	35000	3.2	2.38	8.5	C33-62D	SL280UH135V60D	7785994
XP16-060-230	58500	15.7	12	53000	34800	3.22	2.38	8.5	C33-62D	SLP98UH135XV60D	7786000
XP16-060-230	57000	14.5	11.5	53000	35000	3.16	2.36	8.2	C33-62D		7785977
XP16-060-230	58500	15.7	12.2	53000	34800	3.22	2.38	8.5	C37-62D	EL180UH135E60D	10085007
XP16-060-230	58000	15.2	11.5	53000	35200	3.18	2.36	8.2	C37-62D	EL195UH135XE60D	10085003
XP16-060-230	58000	15.2	11.5	53000	35200	3.18	2.36	8.2	C37-62D	EL296UH135XE60D	10085001
XP16-060-230	58500	15.7	12	53000	34800	3.22	2.38	8.5	C37-62D	EL296UH135XV60D	10085005
XP16-060-230	58000	15.7	12	53000	35000	3.2	2.38	8.5	C37-62D	SL280UH135V60D	10085009
XP16-060-230	58500	15.7	12	53000	34800	3.22	2.38	8.5	C37-62D	SLP98UH135XV60D	10085011
XP16-060-230	57000	14.5	11.5	53000	35000	3.16	2.36	8.2	C37-62D		10084115
XP16-060-230	57000	14.5	11.5	56000	34400	3.44	2.48	8.5	CBA27UHE-060		10258975
XP16-060-230	57000	15	11.5	53500	35400	3.24	2.44	8.2	CBX25UHV-060		7785988
XP16-060-230	58000	15.5	12	56500	34400	3.62	2.52	8.5	CBX27UH-060		7785978
XP16-060-230	57000	14.5	11.5	56000	36200	3.32	2.46	8.5	CBX32M-060		7785980
XP16-060-230	57000	15.7	12	55500	35800	3.34	2.48	8.5	CBX32MV-060		7785979
XP16-060-230	58000	15.7	12.2	55500	34000	3.38	2.42	8.2	CBX32MV-068		7785982
XP16-060-230	57000	15.5	11.5	56000	36000	3.36	2.46	8.5	CBX40UHV-060		7785981
XP16-060-230	58500	15.5	11.5	61000	37400	3.48	2.44	8.5	CH23-68	EL180UH135E60D	7785983
XP16-060-230	58500	15.2	11.5	61500	37600	3.44	2.4	8.5	CH23-68	EL195UH135XE60D	7786017
XP16-060-230	58500	15.2	11.5	61500	37600	3.44	2.4	8.5	CH23-68	EL296UH135XE60D	7786015
XP16-060-230	59000	15.5	11.5	61500	37600	3.46	2.42	8.5	CH23-68	EL296UH135XV60D	7786013
XP16-060-230	58500	15.7	11.5	61000	37400	3.46	2.42	8.5	CH23-68	SL280UH135V60D	7786012
XP16-060-230	59000	15.5	11.5	61500	37600	3.46	2.42	8.5	CH23-68	SLP98UH135XV60D	7786014
XP16-060-230	58500	14.5	11.5	61500	37800	3.42	2.4	8.2	CH23-68		7785974
XP16-060-230	54500	15.7	11.5	52500	34600	3.14	2.34	8.2	CH33-62D	EL180UH135E60D	7786008
XP16-060-230	54500	15.2	11	53000	35000	3.1	2.32	8.2	CH33-62D	EL195UH135XE60D	7786007
XP16-060-230	54500	15.2	11	53000	35000	3.1	2.32	8.2	CH33-62D	EL296UH135XE60D	7786016

NOTES:

All matches with EL195E and ML180E gas furnaces require the use of a Blower Motor Relay Kit (**85W66**) for proper unit operation.

Ratings are AHRI certified to AHRI Standard 210/240 (with 25 ft. of connecting refrigerant lines);

- Cooling Ratings - 95°F outdoor air temperature and 80°F db/67°F wb entering indoor coil air.
- High Temperature Heating Ratings - 47°F db/43°F wb outdoor air temperature and 70°F db entering indoor coil air.
- Low Temperature Heating Ratings - 17°F db/15°F wb outdoor air temperature and 70°F db entering indoor coil air.

All ratings include the use of a blower time delay relay (TDR). All Lennox variable-speed Furnaces and Air Handlers have time delay capabilities. Other Furnaces and Air Handlers may require an optional time delay relay (**58M81**) for field installation. See furnace or air handler specifications to determine if relay is needed.

Also see TXV Substitution Table at the beginning of the Heat Pump AHRI System Matches section.

When used with gas furnaces, a dual-fuel control, a control system with dual-fuel capabilities (LZP-2 or LZP-4), or a thermostat with dual-fuel capabilities must be used (ordered extra).

To convert HSPF from Region IV to Region V - Divide by 1.15.

AHRI SYSTEM MATCHES

Model No.	Cooling Capacity	SEER	EER	Heat Capacity		Heat COP		HSPF (IV)	Coil or Air Handler	Furnace	AHRI Reference
				High	Low	High	Low				
XP16-060-230	54500	15.5	11	53000	34800	3.14	2.32	8.2	CH33-62D	EL296UH135XV60D	7786002
XP16-060-230	54500	15.7	11	53000	34800	3.14	2.32	8.2	CH33-62D	SL280UH135V60D	7786010
XP16-060-230	54500	15.5	11	53000	34800	3.14	2.32	8.2	CH33-62D	SLP98UH135XV60D	7786011
XP16-060-230	57500	15.2	12	57500	37200	3.28	2.46	8.5	CR33-50/60	EL180DF110E60C	7786006
XP16-060-230	57000	15	12	57000	37200	3.18	2.44	8.2	CR33-50/60	EL195DF110XE60C	7785997
XP16-060-230	56500	15	11.5	57000	37400	3.14	2.42	8.2	CR33-50/60	EL296DF090XV60C	7785998
XP16-060-230	57000	15	12	57000	37200	3.18	2.44	8.2	CR33-50/60	EL296DF110XE60C	7785995
XP16-060-230	56500	15	11.5	57000	37400	3.14	2.42	8.2	CR33-50/60	EL296DF110XV60C	7785996
XP16-060-230	57000	15.2	11.5	57500	37400	3.24	2.46	8.5	CR33-50/60	SL280DF090V60C	7786004
XP16-060-230	57000	15.2	12	57500	37200	3.24	2.46	8.5	CR33-50/60	SL280DF110V60C	7786018
XP16-060-230	56500	15	11.5	57000	37400	3.14	2.42	8.2	CR33-50/60	SLP98DF090XV60C	7786003
XP16-060-230	56500	15	11.5	57000	37400	3.14	2.42	8.2	CR33-50/60	SLP98DF110XV60C	7786001
XP16-060-230	56500	15	11.5	57000	37400	3.14	2.42	8.2	CR33-60	EL296DF110XV60C	7786005
XP16-060-230	56500	15	11.5	57000	37400	3.14	2.42	8.2	CR33-60	SLP98DF110XV60C	7786009
XP16-060-230	57000	14.2	11.5	57500	37600	3.16	2.4	8.2	CR33-60		7785975
XP16-060-230	58500	15.7	12.2	53000	34800	3.22	2.38	8.5	CX34-62D	EL180UH135E60D	7785991
XP16-060-230	58000	15.2	11.5	53000	35200	3.18	2.36	8.2	CX34-62D	EL195UH135XE60D	7785986
XP16-060-230	58000	15.2	11.5	53000	35200	3.18	2.36	8.2	CX34-62D	EL296UH135XE60D	7785984
XP16-060-230	58500	15.7	12	53000	34800	3.22	2.38	8.5	CX34-62D	EL296UH135XV60D	7785989
XP16-060-230	58000	15.7	12	53000	35000	3.2	2.38	8.5	CX34-62D	SL280UH135V60D	7785993
XP16-060-230	58500	15.7	12	53000	34800	3.22	2.38	8.5	CX34-62D	SLP98UH135XV60D	7785999
XP16-060-230	57000	14.5	11.5	53000	35000	3.16	2.36	8.2	CX34-62D		7785976
XP16-060-230	58500	15.7	12.2	53000	34800	3.22	2.38	8.5	CX38-62D	EL180UH135E60D	10085006
XP16-060-230	58000	15.2	11.5	53000	35200	3.18	2.36	8.2	CX38-62D	EL195UH135XE60D	10085002
XP16-060-230	58000	15.2	11.5	53000	35200	3.18	2.36	8.2	CX38-62D	EL296UH135XE60D	10085000
XP16-060-230	58500	15.7	12	53000	34800	3.22	2.38	8.5	CX38-62D	EL296UH135XV60D	10085004
XP16-060-230	58000	15.7	12	53000	35000	3.2	2.38	8.5	CX38-62D	SL280UH135V60D	10085008
XP16-060-230	58500	15.7	12	53000	34800	3.22	2.38	8.5	CX38-62D	SLP98UH135XV60D	10085010
XP16-060-230	57000	14.5	11.5	53000	35000	3.16	2.36	8.2	CX38-62D		10084114

NOTES:

All matches with EL195E and ML180E gas furnaces require the use of a Blower Motor Relay Kit (**85W66**) for proper unit operation.

Ratings are AHRI certified to AHRI Standard 210/240 (with 25 ft. of connecting refrigerant lines);

- Cooling Ratings - 95°F outdoor air temperature and 80°F db/67°F wb entering indoor coil air.
- High Temperature Heating Ratings - 47°F db/43°F wb outdoor air temperature and 70°F db entering indoor coil air.
- Low Temperature Heating Ratings - 17°F db/15°F wb outdoor air temperature and 70°F db entering indoor coil air.

All ratings include the use of a blower time delay relay (TDR). All Lennox variable-speed Furnaces and Air Handlers have time delay capabilities. Other Furnaces and Air Handlers may require an optional time delay relay (**58M81**) for field installation. See furnace or air handler specifications to determine if relay is needed.

Also see TXV Substitution Table at the beginning of the Heat Pump AHRI System Matches section.

When used with gas furnaces, a dual-fuel control, a control system with dual-fuel capabilities (LZP-2 or LZP-4), or a thermostat with dual-fuel capabilities must be used (ordered extra).

To convert HSPF from Region IV to Region V - Divide by 1.15.

REVISIONS

Sections	Description of Change
AHRI System Matches	Updated

Visit us at www.lennox.com

For the latest technical information, www.LennoxPROs.com

Contact us at 1-800-4-LENNOX

NOTE - Due to Lennox' ongoing commitment to quality, Specifications, Ratings and Dimensions subject to change without notice and without incurring liability.
Improper installation, adjustment, alteration, service or maintenance can cause property damage or personal injury.
Installation and service must be performed by a qualified installer and servicing agency.

©2017 Lennox Industries, Inc.